ULAB JOURNAL OF SCIENCE AND ENGINEERING

A RESEARCH PUBLICATION OF ULAB

November 2012 Vol. 3 ISSN: 2079-4398

CONTENTS

Editorial 1

Diagnosis and Management of Cardiovascular Disease with an Intelligent Decision-Making Support System 2
J. Bohacik and D. N. Davis

Proposition of a Language Learning Procedure for Artificial Intelligence to Enhance Basic Communication Skill 7
Nishatul Majid and Tasnubha Bably

Factors Influencing Teachers' Laptop Purchases 12
Shamsunnahar Tania

ICT-Supported Interactive Learning in Engineering Education: Bangladesh Context 18
Md Kabirul Islam

An Improved Approach for Localization of Text Regions from Complex Document Images 24
Madeena Sultana, Sabrina Sharmin, Farhana Sabrina, Mohammad Shorif Uddin

GLFSR-Based Test Processor Employing Mixed-Mode Approach in IC Testing 30
Mohammad Akbar Kabir, Md. Nasim Adnan, Lutful Karim

(Contents Continued on Back Cover)

School of Science & Engineering
UNIVERSITY OF LIBERAL ARTS BANGLADESH

ULAB JOURNAL OF SCIENCE AND ENGINEERING

Vol. 3, November 2012

(Contents Continued from Front Cover)

Student Learning Management Based on Collaborative and Interactive Information System 35
Muhammad Pasha, Syed Akhter Hossain, Md. Kabirul Islam

SaaS: A New Era for Call Center based on Cloud Computing 44
Md. Mahmudul Hasan and Woakil Uddin Ahmed

Modeling the Number of Children Ever Born in a Household in Bangladesh Using Generalized Poisson Regression 51
Mariam Begum Ratna, Hossain Ahmed Khan, Md. Anower Hossain

A Note for Contributors 57

Copyright Form 58

ULAB
UNIVERSITY OF LIBERAL ARTS BANGLADESH

House 56, Rd 4/A @ Satmasjid Road Dhanmondi, Dhaka-1209, Bangladesh
Phone: 966-1255, 966-1301, 0171-309-1936. Web: www.ulab.edu.bd

Editorial
Vol. 3, 2012

WE are pleased to present the third volume of the ULAB's Journal of Science and Engineering (JSE). It's been another successful year for us. Since 2010, ULAB's JSE has maintained its position as the most prestigious national publication in the field of science and engineering. According to the publication policy all papers submitted to this journal have been subject to a rigorous peer-review.

In 2010, 28 papers were submitted for publication, with 10 being accepted (acceptance rate: 35.71%). In 2011, submissions increased to 30, on the basis of rigorous peer review 10 papers are being accepted (acceptance rate: 33.33%). This year 17 papers were submitted for publication, with 9 being accepted (acceptance rate: 52.94%). In 2010 and 2011, we found many ordinary papers were being submitted, but this year the quality of submitted papers is really better.

We continuously strive to publish original research that contains elements with technical novelty in a timely manner. The journal's focus is on traditional areas of both theoretical and practical applications of physics, mathematics, statistics, environmental science, electronics, computer science, information and communication engineering. In addition, we shall gladly accept submissions on emerging technologies and other emerging areas related to the above fields.

You are most welcome to read this issue of the ULAB Journal of Science and Engineering. In order to continue publishing a high-quality journal, JSE's editorial board seeks excellent contributions containing original research or reviews. Our editorial board works tirelessly to provide contributors with a prompt and thorough review process.

We would like to express our thanks to Professor A.H.M. Asadul Huq for his excellent work and dedication to JSE as an Associate Editor for the vol. 1 and vol. 2. We welcome Professor Rezaul Karim Mazumder to become an Associate Editor of JSE.

Finally, we would like to extend our heartfelt thanks to every author, reviewer and reader for your support and dedication to JSE. We strongly believe that together, we shall elevate the journal to even higher levels of quality, impact, and reputation.

Mohammad Shorif Uddin
Editor-in-Chief

Rezaul Karim Mazumder
Associate Editor

Sazzad Hossain
Associate Editor

Diagnosis and Management of Cardiovascular Disease with an Intelligent Decision-Making Support System

J. Bohacik andD. N. Davis

Abstract—Cardiovascular disease is the principal cause of death in most European countries and may have a major negative impact on the patients' functional status, productivity, and quality of life. It seems an automatic decision support system could lower these negative impacts. The current development stage of a patient-centric solution for remote management and treatment of cardiovascular patients is described from the point of view of decision support. The principle of the Decision-making Support System is presented. Our prototype experimental results with Data Mining Models are also provided.

Keywords—cardiovascular disease, data mining, decision support systems, risk assessment.

1 INTRODUCTION

EUROPEANhealth care systems are facing important challenges, such as ageing populations, increase in lifestyle-related health problems and limitations of health care resources. According to [4], cardiovascular diseases have been reported as the principal cause of death in most European countries. They account for 43% of mortality among men and for 56% among women. For both men and women coronary heart disease is the most prevalent cause of cardiovascular death; while stroke is relatively more prevalent in women. In cardiovascular risk assessment, diabetes is a very important factor as diabetes patients are at high risk for cardiovascular disease. Its prevalence is still rising due to several factors; overweight being one of these factors. Other important factors are age, gender, genetic factors, clinical factors such as hypertension, and life style factors such as smoking, alcohol consumption, physical exercise and diet.

Monitoring risk factors is important for the prevention of malignant events. Three areas of prevention can be distinguished: a) prevention in the total population; b) prevention in high risk groups; and c) prevention after cardiovascular events. Prevention in the total population includes life style factors and programs targeted at various groups in diverse settings, such as schools, local communities, homes for elderly people, healthcare providers etc. Prevention in high risk groups is targeted at chronic clinical conditions, which mainly affect adults aged 55 years or over, that would otherwise increase the risk for cardiovascular events, such as hypertension and diabetes. These conditions may also have a major negative impact on the patients' functional status, productivity, and quality of life. Acute cardiovascular events such as myocardial infarction and stroke, determine mortality and, if the patient survives, define the quality of life and risk for recurrent events. Prevention in high risk groups and prevention after cardiovascular events includes both life style changes and medication.

We are focused on high risk cardiovascular patients and prevention after cardiovascular events as active participants of the Bravehealth project. The Bravehealth project proposes a patient-centric vision to cardiovascular management and treatment, providing people already diagnosed as subjects at risk with a sound solution for continuous and remote monitoring and real time prevention of malignant events. The proposed solution is made up of the following sub-systems: 1) Wearable Unit: a miniaturised sensor, able to continuously monitoring parameters needed to preform a diagnosis by means of algorithms running on it. It is possible to perform sheduled analysis of parameters and to remotely trigger the screening of signs; 2) Remote Server: it is the main interface between clinicians and the system, providing both automated support, e.g. messages to the patient generated by the system, and doctor managed supervision, allowing communication with the patients with voice, text, and chat messages; 3) Gateways: they support health care delivery and they help to monitor the general health of the patient.

The focus of this paper is decision support in the BraveHealth system. The paper is organized as follows. In section 2, sub-systems of the BraveHealth system are described from the point of view of decision support. The Decision Support System (DSS) itself is presented in section 3. Our prototype experimental results are discussed in section 4. Section 5 concludes this paper.

- *J. Bohacik is with the Department of Computer Science, Faculty of Science, University of Hull, Cottingham Road, Hull, HU6 7RX, United Kingdom and with the Department of Informatics, Faculty of Management Science and Informatics, University of Zilina, 010 26 Zilina, Slovakia. E-mail: J.Bohacik@ hull.ac.uk*
- *D.N.Davis is with the Department of Computer Science, Faculty of Science, University of Hull, Cottingham Road, Hull, HU6 7RX, United Kingdom. E-mail: D.N.Davis@hull.ac.uk.*

Manuscript received on 19June 2012 and accepted for publication on 4July 2012.

© 2012 ULAB JSE

2 Sub-systems of the BraveHealth System

The BraveHealth system, for decision support, is composed of logical sub-systems as shown in Figure 1. As a result, it can be seen that decision support is required across all sub-systems: Patient Measure Devices, Mobile Patient Gateway, Remote Server, and Clinician Gateway. The communication and collaboration among these sub-systems is shown in Figure 2.Patient Measure Devices are Wearable Unit, Blood Pressure Cuff, Digital Scales, etc. The prototype of the Wearable Unit is made of discrete components. It is designed to sense biological signals of interest, amplify and filter them, convert and process them in the digital domain. It is also designed to store and transmit (un)processed data to the Mobile Patient Gateway, and to receive configuration data from the Gateway. Patient Measure Devices connect to the patient mobile via Bluetooth. The data from these devices arrives encrypted on the patient mobile (an Android device) and the data is relayed to Remote Server for processing. Alert Notifications such as Green Notification meaning the patient's condition is reverted to normal, or Episodic Measures such as the patient's systolic blood pressure at a specific time point are not processed on the patient mobile.

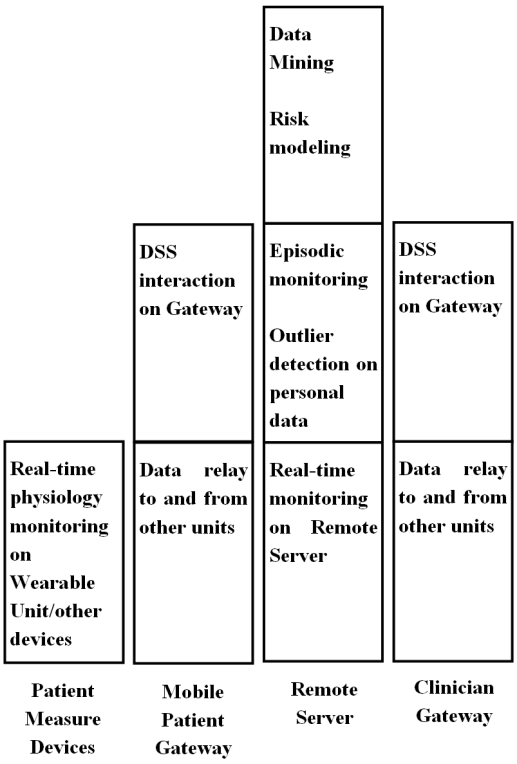

Figure 1: The BraveHealth logical architecture from the point of view of decision support.

Mobile Patient Gateway has two primary functions. The first is to act as the conduit through which Wearable Unit sends its data to Remote Server. The second is to act as a client to Remote Server so that information is displayed to provide an indication of the current health situation, prompts for medication or exercises, or requests for information, such as short surveys. Mobile Patient Gateway interfaces with Remote Server via either a desktop PC, a laptop or a tablet. From this Ethernet/Internet connection the patient mobile allows the patient to interact with the BraveHealth system. Patient configuration and information are kept on the Mobile Patient Gateway for ease of access by the patient, but this patient profile is a result of a configuration (by clinicians) that has happened on the Remote Server. In addition to the Mobile Patient Gateway, the Patient TV Gateway can be used as a client of the Remote Server and as a patient interaction device. It does not store data nor perform decision support processing other than interaction and response/query management to the Remote Server.

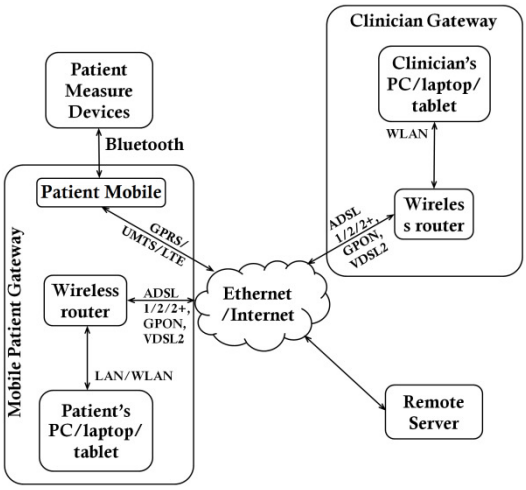

Figure 2: Working process of the BraveHealth sub-systems.

The Clinician Gateway allows the medical professionals who treat a patient to have access to the data collected from the patient's Wearable Unit, in both a trace of readings from different sensors and also a static overview of the readings. Clinicians have an indication of the status of all patients under their care, and can access the Decision Support System. Clinicians configure the BraveHealth system for a patient, including the Wearable Unit. This configuration is stored at the Remote Server. A subset of the patient data (including the Wearable Unit configuration) is stored at the Mobile Patient Gateway and it is used to configure the Wearable Unit according to the clinicians' requirements (e.g. Patient Risk Level). Episodic measures are collected according to this configuration. In normal operation, these are stored locally on the Mobile Patient Gateway and relayed to Remote Server (and stored in a database) at more over-reaching episodes. Clinician Gateway interfaces with the Remote Server via either a desktop PC, a laptop or a tablet. Any other device connects to one of these in order to interact with the BraveHealth system.

3 Decision Support System

The Decision Support System being built into the BraveHealth architecture is intended to provide support for both the clinician and the patient. Through the implementation of standard clinical models it ensures that

routine clinical consultations are made more consistent and informative. The implementation of the BraveHealth system includes multiple Decision Support Systems that augment the functionality of the Wearable Unit (and other Patient Measure Devices) to ensure a more informative experience for both the patient and the clinician. An extended functionality to multiple Decision Support Systems augments the Telehealth functionality of the BraveHealth system and allows improved clinical risk analysis.

The BraveHealth system supports the following levels of decision support sub-systems:

- Wearable Unit Processor;
- Lightweight Decision Support System on the Mobile Patient Gateway;
- Full Decision Support System on the Remote Server;
- Decision Support for Clinicians on the Clinician Gateway.

Decision model building is done only on the Remote Server but it can be deployed across the architecture. Full Decision Support System has the capability (and models) to recommend Patient Risk Level changes. The clinicians need to decide whether they want Full Decision Support System to change Patient Risk Level or merely make a recommendation to the clinicians. Wearable Unit Processor is only capable of generating data, specific data related analyses and initiating Alert Notifications. It does not have access to the contextual information needed to determine a more appropriate status of the patient (such as the change of Patient Risk Level).

The expected functionality and knowledge models of the Decision Support System architecture are as follows:

- Clinical Models: decision support models such as alert and pathology risk models;
- Causal Models: diagnostic models that allow causal relationships to be modelled. These can be based on Clinical Models or improve on models using Bayesian networks;
- Data Mining Models: classification models deployed on the Mobile Patient Gateway and the Remote Server such as classification rules, decision trees, fuzzy rules, and neural networks.

The monitoring schedule and actions of the BraveHealth system are tailored to each patient according to the patient groupings. Thus within the BraveHealth system patients are categorized based on Patient Pathology and Patient Risk Level, with patient specific Alert Notifications. The risk profile for any patient is a combination of three factors:

- Pathology types: patients are to be assigned by clinicians as belonging to a specific pathology type, e.g. Heart Failure or Hypertension;
- Risk stratification: patients are assigned by clinicians as belonging to one of three categories: high risk, medium risk or low risk. These categories and their definitions are based on sound rules drawn from clinical practice. Movements between these levels can be monitored, or recommended. But only clinicians can change the risk status of the patient (Patient Risk Level). Full Decision Support System monitors patients, and acts as an aide to the clinicians by offering decision support (to clinicians) on a patient's current risk level by flagging up important changes. This uses expert system technologies that can be augmented (after a period of data collection within BraveHealth) through data mining;
- Alert Notifications: clinicians assign patient specific thresholds for three alert categories: Red Notification, Yellow Notification or Green Notification. Emergency Notification will be incorporated into subsequent BraveHealth releases. Full Decision Support System enhances the support provided to both the patients and the clinicians and indicates changes to the clinicians to Risk stratification based on these Alert Notifications. Green Notifications are only sent when the prior alert was Yellow Notification or Red Notification.

Alert Notifications in the BraveHealth system are defined by the clinicians as follows:

- Red Notification: a serious modification of clinical parameters requiring immediate attention;
- Yellow Notification: a non-critical but potentially dangerous modification of clinical parameters has appeared;
- Green Notification: the patient's condition is reverted to the normal status;
- Emergency Notification: a set of pathological conditions which represent a life threatening event. When one of these conditions applies, the emergency protocol is activated. Emergency Notifications are more than a special case of Red Notifications and will be introduced into BraveHealth after the initial prototype.

4 Experimental Results

At the current state we have done some prototype experiments with Alert Notifications and Data Mining Models. Experiments were carried out with our Java software tool which is being developed with the intention of its permanent integrational the Remote Server of the BraveHealth system. Some core algorithms are implemented in external libraries: Netica™[6] and Weka [7]. In this section, the results of our experiments with Data Mining Models are discussed. The performance of Data Mining Models is measured with sensitivity = tp/(tp + fn), specificity = tn/(tn + fp), and accuracy = (tp+tn)/(tp+fp+fn+tn). In the formulas, tp/ fp/ fn/ tn is the number of true positives/false positives/false negatives/true negatives. A low risk patient is considered negative and a high risk patient is considered positive. Medium risk patients are not recognized at our prototype experiments. Values tp, fp, fn and tn are computed during 10-fold cross-validation. As a dataset, a group of 839 patients is used. The patients are described by 17 attributes: *Age*, *Gender*, *Heart disease*, *Diabetes*, *Stroke*, *Side*, *Respiratory problem*, *Renal failure*, *ASA grade*, *Hypertension*, *ECG*, *Duration*, *Blood loss*, *Shunt*, *Patch*, *Coronary artery bypass surgery*, and *Consultant*. The attributes are considered equally important initially. Some of them are considered more important than others in Data Mining Models, but the decision about their importance is based on particular Data Min-

ing Models and collected data about patients.

TABLE 1
EXPERIMENTAL RESULTS

Method	SEN (%)	SPEC (%)	ACC (%)
Bayes	7.94	97.48	84.03
C4.5	4.76	98.60	84.51
LVE	65.08	75.88	74.26
MCA-T-T	60.32	96.07	90.70
MLP	15.08	89.62	78.43
MMI	77.78	89.62	87.84
NNC	15.08	90.18	78.90
TreeBayesNet	77.78	96.63	93.80

Our experimental results are presented in Table 1. The meaning of the used symbols is as follows.Sensitivity (SEN), specificity (SPEC), accuracy (ACC) are measures of the performance of Data Mining Models in percentages(%). Bayes denotes a Bayesian network implemented in Weka as class BayesNet. The Bayesian network represents a joint probability distribution over a set of categorical attributes. Numerical attributes are discretized. It consists of a directed acyclic graph and conditional probability tables. It allows the computation of the (joint) posterior probability distribution of any subset of unobserved assignments of values to attributes, which makes it possible to use for classification. C4.5 is a decision tree classifier implemented in Weka as class J48.The decision tree has two types of nodes: a) the root and internal nodes (associated with an attribute); b) leaf nodes (associated with a class). Its creation is based on searching attributes for potential associations with nodes on the basis of information they bring.Basically, each non-leaf node has an outgoing branch for each possible categorical value/subset of numerical values of the attribute. Risk for a patient is determined using the decision tree, beginning with the root, successive internal nodes are visited until a leaf node is reached. The leaf node contains the risk. LVE is a fuzzy rule classifier based on linguistic variable elimination [1]. First it transforms attributes into variables and then it computes membership degrees on the basis of the data about patients.Then it eliminates the least important attribute in a way that leads to dividing the data into two groups with subsets of the variables and with minimal inconsistences between the membership degrees for the variables and the class variable. It continues in the groups until no further elimination is considered important and a set of fuzzy rules is formed. The formed fuzzy rules are used for risk estimation.MCA-T-T transforms attributes into variables and then it computes membership degrees. It makes a fuzzy decision tree which is transformed into fuzzy rules. It uses classification ambiguity as a criterion for association of a variable with the node of the tree and choses the variable with its lowest value.Fuzzy rules acquired from the tree are simplified and the degree of truthfulness of fuzzy rules is kept in simplification [8]. MLP is a neural network classifier using multilayer perception implemented in Weka as class MultilayerPerception.It consists of interconnected neurons. A neuron takes positive and negative numerical values from other neurons and when the weighted sum of the stimuli is greater than a given threshold value, it activates itself. MMI is similar to MCA-T-T, but it uses maximization of mutual information as a criterion for association of a variable with a node [5]. Also, there is no simplification of the acquired fuzzy rules. NNC is a nearest neighbour classifier using non-tested generalized examples [7] implemented in Weka as class NNge.It assumes known cardiovascular patients correspond to points in spaceR^n. When the risk for a new cardiovascular patient is being determined, k-nearest known cardiovascular patients to the new one are found and they are used with a weight.TreeBayesNet denotes a Bayesian network implemented with Netica™ and learnt on the basis of a C4.5 decision tree [6].

The methods in Table 1 are evaluated so that minimizing life-threatening situations, minimizing costs and maximizing interpretability are preferred. Life-threating situations appear when patients at high risk are considered low risk, which is measured by sensitivity. This risk should be minimized and so sensitivity should be maximized. Costs are increased when low risk patients are treated as if they were high risk, which is measured by specificity. Interpretability is subjective, but it is obvious that the interpretability of neural networks is worse than the interpretability of other compared methods. Also, if we consider e.g. a group of discovered fuzzy rules, a better interpretability is achieved when the number of fuzzy rules is smaller and the expressions in conditions have fewer assignments of linguistic terms to linguistic variables. Our classifier TreeBayesNet gives the highest sensitivity 77.78%, the highest specificity 96.63%, and the highest accuracy 93.80%. Its interpretability is also good as it is a Bayesian network, which is familiar to many clinicians. When only fuzzy rule classifiers are taken into consideration, the best combination of minimization of life-threatening situations, minimization of costs and maximization of interpretability is achieved by MCA-T-T.

5 CONCLUSION

A prototype design and recent research on a patient-centric solution for remote management and treatment of cardiovascular patients and its Decision Support System architecture are presented in this paper. The solution is composed of four sub-systems: Patient Measure Devices, Mobile Patient Gateway, Remote Server and Clinician Gateway. Decision support is required on all of the subsystems. It is done by the following decision support subsystems: Wearable Unit Processor, Lightweight Decision Support System on the Mobile Patient Gateway, Full Decision Support System capable of (re-)building knowledge models on the Remote Server, and Decision Support for clinicians on the Clinician Gateway. Cardiovascular patients are divided into three risk levels and also according to a specific pathology type. A patient is monitored in real-time and the obtained data is used by decision support sub-systems. With the support of Clinical Models, Causal Models and Data Mining Models, they can trigger

Alert Notifications meaning different levels of emergency or they can suggest a change of the patient's risk level to clinicians. Our prototype experiments with Data Mining Models are analysed further. A model using a Bayesian network learnt on the basis of a decision tree seems to have the best results. Its sensitivity measuring how unlikely life-threatening situations are is 77.78% and its specificity measuring how the costs of treatment are minimized is 96.63%. Fuzzy rule classifiers also achieve promising results. Among them, a fuzzy rule classifier based on minimization of classification ambiguity achieves the best results with sensitivity 60.32% and specificity 96.07%. Further research will include integration of Data Mining Models into alert rules for Alert Notifications.

ACKNOWLEDGMENT

This work is funded by the European Commission's 7th Framework Program: BRAVEHEALTH FP7-ICT-2009-4, Objective ICT-2009.5.1: Personal Health Systems: a) Minimally invasive systems and ICT-enabled artificial organs: b) Cardiovascular diseases.

REFERENCES

[1] J. Bohacik, "Discovering fuzzy rules in databases with linguistic variable elimination,"*Neural Network World*, vol. 20, no. 1, pp. 45-61, 2010.

[2] J. Bohacik, D. N. Davis: Estimation of cardiovascular patient risk with a Bayesian network, *Proc. Ninth European conference of young research and scientific workers (TRANSCOM 2011)*, pp. 37-40, 2011.

[3] M. Brent, *Instance-Based Learning: Nearest Neighbour with Generalization*, Master's thesis (citeseerx.ist.psu.edu): The University of Waikato, 1995.

[4] J.v.Lieshout, M.Wensing, Grol, R., *Prevention of cardiovascular diseases: The role of primary care in Europe (1st edition)*, Electronic book (www.epa-cardio.eu): Bertelsmann Stiftung and Centre for Quality of Care Research, EPA Cardio project, pp. 4-14, 2008.

[5] V., Levashenko, E. Zaitseva, "Usage of new information estimations for induction of fuzzy decision trees," *Proc. Third International Conference on Intelligent Data Engineering and Automated Learning (IDEAL '02)*, pp. 493-499, 2002.

[6] Norsys Software Corp.,"Netica™ Application,"http://www.norsys.com/netica.html, 2011.

[7] Witten, I. H., Frank, E., Hall, M. A., "Data Mining: Practical Machine Learning Tools and Techniques (3rd edition)," Burlington: Morgan Kaufman., 2011.

[8] Y. Yuan, M. J. Shaw, "Induction of fuzzy decision trees,"*Fuzzy sets and systems*, vol. 69, no. 2, pp. 125-139, 1995.

J. Bohacik received a Master's degree (Ing.) in Information and Control Systems in 2006 and a Doctoral degree (PhD.) in Applied Informatics (Fuzzy Rules and Knowledge Discovery in Databases) in 2009, both from the University of Zilina, Slovakia. During his PhD studies he was in several government and EU research stays in Finland, Portugal and Japan.After graduation he worked as Assistant Professor at the University of Zilina, Slovakia for one yearand now he has been working as Research Assistant at the University of Hull, UK for about two years. In 2012, he was conferred a professional degree of European Engineer (EurIng)by the European Federation of National Engineering Associations and The Association of Slovak Scientific and Technological Societies. He is a (co-)author of 17 published papers in journals and conference proceedings. He has been a principal holder of two faculty scientific grants, a participant in one national scientific grant and a participant in one international scientific grant. His research interests include medical systems, data mining, machine learning, artificial intelligence and applications of notions of fuzzy logic. He is a member of the European Society of Cardiology.

D. N. Davis is Director of Research in the Department of Computer Science at the University of Hull, UK. He has a B.Sc. in Psychology, M.Sc. in Knowledge Base Systems and Ph.D. in Diagnostic and Investigative Medicine (The Application of AI in Medicine). He has over 20 years experience in artificial intelligence systems. Successful applications include classification and computer vision problems in business, medicine and geology. He has over 20 years experience in data mining, first working on Decision Trees at Edinburgh and the Turing Institute, Glasgow in 1987. Medical applications of data mining and decision support include Urology, Orthodontics, Stomach Cancer, Cervical Cancer, Bowel cancer, Neuroanatomy and Cardiovascular medicine. He has published widely with over 100 publications.

Proposition of a Language Learning Procedure for Artificial Intelligence to Enhance Basic Communication Skill

Nishatul Majid and Tasnubha Bably

Abstract—The idea of creating language experts through machines is one of the toughest challenges faced by the industry of Artificial Intelligence over past few decades. The concept of language is old enough to recall how we really discovered it and the learning process is mysterious enough to implement. This paper presents some facts and scenarios, which play vital roles to adapt the concept of language for a human child, and also tried to propose some analogical equivalency that can be imposed on machines during their learning period. It will never be possible to ignore the impacts of human emotion, motivation, assessment, situation judgment capability etc. from the context of a natural and successful conversation; therefore some relevant propositions over the existing architecture of computational linguistics are proposed here in this work.

Keywords—AI – Artificial Intelligence, NLP – Natural Language Processing, HSP - Human Speech Processing, CL – Computational Linguistics, AGI – Adaptive General Intelligence, AIML - Artificial Intelligence Markup Language

1 Introduction

ARTIFICIAL Intelligence is a concept of implementing intelligence through machines/ computer programs. Even a few decades ago, this was merely a handy term, which was useful to write science fiction stories and other fantasy purposes. Recent days, especially in the 1990s and early 21st century, AI achieved its greatest successes and it is now clearly predictable that, in near future, there will be revolutionary change in human civilization architecture due to this AI industries. The introductory uses that have already been started by the end of the day are - game playing, speech recognition, understanding natural language, computer vision, expert systems, heuristic classification etc. These are simply childish applicability of this concept and the fact is; the technology is still in a premature developing stage. The fundamental challenges that are to be faced are in the sectors of deduction, logical reasoning, problem solving, knowledge representation, planning, learning, **N**atural **L**anguage **P**rocessing (**NLP**)/ **H**uman **S**peech **P**rocessing (**HSP**), motion and manipulation, perception, social intelligence, creativity, general intelligence etc. The key-concern of this context is oriented with the NLP/ HSP section; more specifically, with a sub-section of NLP/ HSP called Text Processing; under the discipline named **C**omputational **L**inguistics (**CL**).

- *Nishatul Majid is with the Department of Applied Physics, Electronics and Communication Engineering, University of Dhaka, Dhaka – 1000, Bangladesh. E-mail: nishat@du.ac.bd.*
- *Tasnubha Bably is with the English Language Institute, United International University, Dhanmondi, Dhaka-1209, Bangladesh. E-mail: tasnubha9909@gmail.com.*

Manuscript received on 16 January 2012and accepted for publication on 24May 2012.

2 Evolution of Artificial Intelligence

Long before the first computers were built, many scientists were convinced that certain kinds of artifacts could be made to exhibit intelligent behavior. The sector of AI research was founded at a conference on the campus of Dartmouth College in 1956. Programs with which computers can solve word problems in algebra, prove logical theorems and speak English were written by the attendees and some of their students. By the middle of the 1960s, research in the U.S. was profoundly supported by the Department of Defense [1].

The 1970s brought the first commercial applications of machines that could reason from a base of knowledge meticulously gleaned from human experts. Such "*expert systems*" now serve as automated consultants for certain narrow areas of expertise, including specialized medical diagnosis, chemical analysis, circuit design and mineral prospecting. In the early 1980s Japan, followed closely by Britain and the EEC, announced major national programs to develop what are sometimes called "fifth-generation" AI computer systems. In Canada there are a small number of university research groups specializing in AI [2].

In the 1990s and early 21st century, AI achieved its greatest successes. Artificial intelligence is used for logistics, data mining, medical diagnosis and many other areas throughout the technology industry. The success was due to several factors: the incredible power of computers today, a greater emphasis on solving specific sub-problems, the creation of new ties between AI and other fields working on similar problems, and above all a new commitment by researchers to solid mathematical methods and rigorous scientific standards [1].

Several groups and organization, these days, are involved in research and development of linguistic centric AI modules. One example of such a kind is ALICE AI foundation, which is a research and training organization devoted to the development and adoption to AIML (Arti-

© 2012 ULAB JSE

ficial Intelligence Markup Language). There are several projects of this foundation, for example Albert, ALICE, CLAUDIO, DAVE, ShakespeareBot, L.E.O., iGod etc. Furthermore, several companies such as Iplearn, Leverance, MIT, ScanSoft etc. are working on Chat Robot Patents. [3] At the end of 2011, we've got SIRI (Speech Interpretation and Recognition Interface), perhaps the most successful implementation of a natural language user interface, which works as an application for Apple iOS.

3 Proposition of the Module

From the base of human race, language is the most successful way of communication so far. In case of machines, the language is usually called machine language, consists of nothing but a stream of binary bits. If natural human language can be converted into machine language directly that would be a major breakthrough. This is the case where a linguistics based AI unit is needed. The merits of communicating with natural language, rather than giving commands through keyboard, mouse etc. is obvious. It would be case where people will not require being an expert to get his/her job done via machines.

The core of the concept that a machine speaks/ behaves like a human or shows the existence of intelligence with the use of language introduced a new area of linguistics, which is called the Computational Linguistics. In general, computational linguistics draws upon the involvement of linguists, computer scientists, and experts in artificial intelligence, mathematicians, logicians, cognitive scientists, cognitive psychologists, psycholinguists, anthropologists and neuroscientists, among others. [4] The theme of this work is to schematically represent the structure, constrains and procedural operations in order to develop a text based linguistic centric AI unit. Figure 1 shows the position of **Computational Linguistics**.

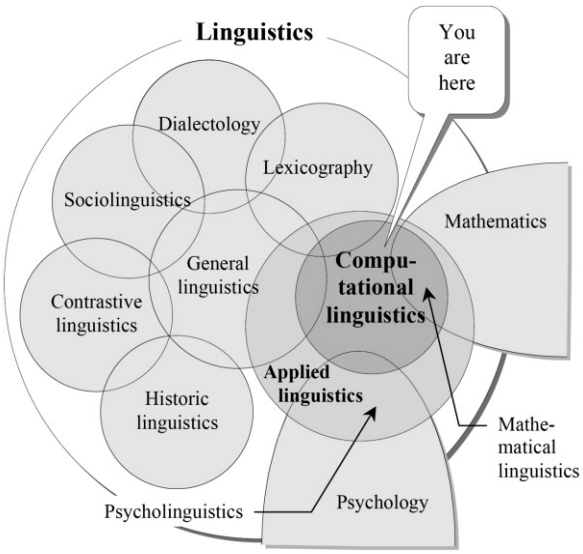

Figure 1: Position of Computational Linguistics [5].

The way a human child learns the concept of language is still now an unsolved mystery. Logically and theoretically, here is no reason that a human child can learn to speak. [6] But practically, with the help of the supreme neural architecture children acquire language quickly, easily, and without effort or formal teaching. It happens automatically, whether their parents try to teach them or not. Though, there is no significant explanation, but it is thought the self-sustaining nature is mainly responsible for this complex process where several inbuilt properties in a child like mimicry, emotion etc. helps during this adaptation process.

Some almond-shaped groups of nuclei located deep within the medial temporal lobes of the brain, called **Amygdala** is thought to be the principle reasoning for these procedures. In complex vertebrates, the amygdala performs primary roles in the formation and storage of memories associated with emotional events. Research indicates that, during fear conditioning, sensory stimuli reach the basolateral complexes of the amygdala, particularly the lateral nuclei, where they form associations with memories of the stimuli. The association between stimuli and the aversive events they predict may be mediated by long-term potentiation, a lingering potential for affected synapses to react more readily. Sometimes, this is referred as **Emotional Learning** [7], [8]. Figure 2 shows the location of Amygdala in the human brain.

Figure 2: Location of Amygdala in the human brain.

Self-Learning: The proposal in this work is to prepare an A.I. unit **Self-Sustainable**. The formal meaning of this term is "*supporting or able to support oneself or itself*" or "*able to continue once begun*". There are some quite similar models like **Self-Learning AI** or **A**daptive **G**eneral **I**ntelligence (**A.G.I**). Computer systems based on AGI technology ('AGIs') are specifically engineered to be able to learn. They are able to acquire a wide range of knowledge and skills via learning similar to the way we do [9]. The proposed self-sustaining model is almost similar to this AGIs concept except it always resides in some kind of short-term and long-term parenting.

4 Growth Prognostication

A human child can learn language from an absolute zero point, as we don't know the how; i.e. an A.I. can't do the same. That's why in the developing stage; some initials have to be introduced for **Language Recognition** and **Language Synthesis**. These are pictorially shown in Figure 3.

Language Recognition or Analysis: The Word Processing unit includes three (or more) layers of information. In the basic layer, there are *dictionaries, thesaurus* etc. as knowledge base. In the secondary level, the sources

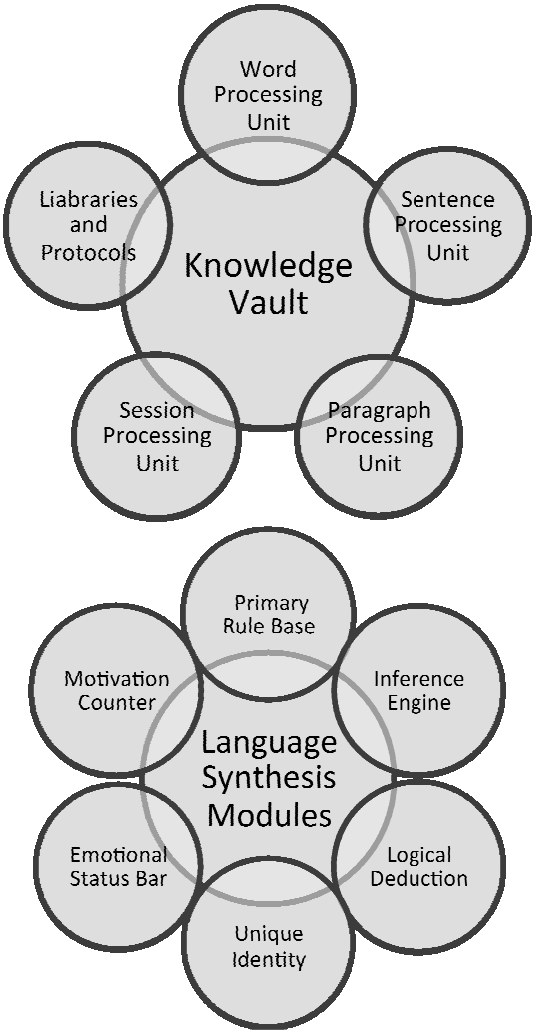

Figure 3: Modules in built for (a) Language Recognition (b) Language Synthesis.

are *online journals, encyclopedias, databases* etc. When these are not enough, in the tertiary level the word processing is done by *analyzing history* (from previous sessions), *forced implications* etc.

The **Sentence Processing Unit** is capable of transforming any sentence into predicate logic according to some rule base. Basically, it includes a rich library about sentence structures and patterning. This Unit can analysis the grammar of any sentence and correct it if necessary. Furthermore, it can propose alternate sentence structures also according to some predefined policy.

The **Paragraph Processing Unit** is capable of summarizing a passage by identifying the keywords, important sentences, word frequency, frequency of the frequencies pattern etc. The **Session Processing Unit** can deduce the ultimate result, output, key issues from any session. It should also be capable of criticizing the users from the over-all session; i.e. this unit can comment on users.

Language Synthesis or Generation: The **Primary Rule Base** is the fundamental library, which includes all the needed rules and protocols for the unit. This will have a direct linkage with the knowledge base/ vault. The **Inference Engine** is the decision maker unit and always has been one of the basic units of any AI module. The purpose of this unit is to take a Decision Statement based of some Input Information. The **Logical Deduction** unit works principally based on basic logical operations like AND, OR, NOT, EXOR etc.

According to the design, there will be a lot of small AI modules integrated with the fundamental database. Each small module will be represented with a **Unique Identification Number** with which will bias all of its random choices in a unique pattern. This is simply to define individuals for the AI modules, which is very important for the inter-communication between AIs in order to exchange or share knowledge, experience.

The **Emotional Status Bar** is basically a concept to virtually simulate the emotional involvement during a conversation. There will be a multidimensional space using all the well defined basic emotions as its fundamental axes. A bar will tend to move on towards some emotional dimension based on the conversation pattern. Each AI individual's psychological pattern will be developed by individual psychiatrists; i.e. they will implement an emotional patent and correct the wrong emotional behavior on a periodic basis during the parenting period.

Finally, the **Motivation Counter**, which is basically a very simple concept and way behind to replace Amygdala or other neural learning patterns, but still it is an introductory effort. The AI module will have a self-marking system for assessing and therefore controlling its behavior. The marking will be based on user's feedback, number of correct assessments, number of valid logical deductions, successful handling of the emotional bar, comments from the parents etc. Therefore, there will a kind of motivation or aim for the unit to score as much as possible. An AI unit with higher marks will eventually indicate more matured one.

Parenting stage: A linguist and a psychiatrist will work as a parent of a module. In this stage, the unit will try to learn something from the interaction with the users. The concept is very simple, a large number of different modules with different unique identity will be stored in a server and each of them will go under text base interaction with users by accepting user requests. For example a user logs in to the server in order to spend some time with a unit. In reply to the request, the server will send one of its free (not already busy with another user) unit. Then there will be an interaction between them for some time and during the conversation the AI unit will try to learn particular things or concepts like new words, new Syntactic, new meaning for different words, proper use of sentences, the ways to carry a conversion perfectly, theme of a conversation/ passage etc from the user's speech and behavior. Besides, the AI modules will undergo communication in between them also in order to share and exchange information. The functionality of a linguist during the parenting period is basically monitoring the AI unit by checking and correcting the things that the module/ unit tried to learn from the previous conversation sessions in regular basis. A group of programmers will then convert the rules from the parents into machine language and impose them on them module. This whole procedure

will then be continued in a cyclic order until the AI modules achieves enough score/ points to be considered as a Matured Program. This whole parenting process is schematically shown in the following Figure 4.

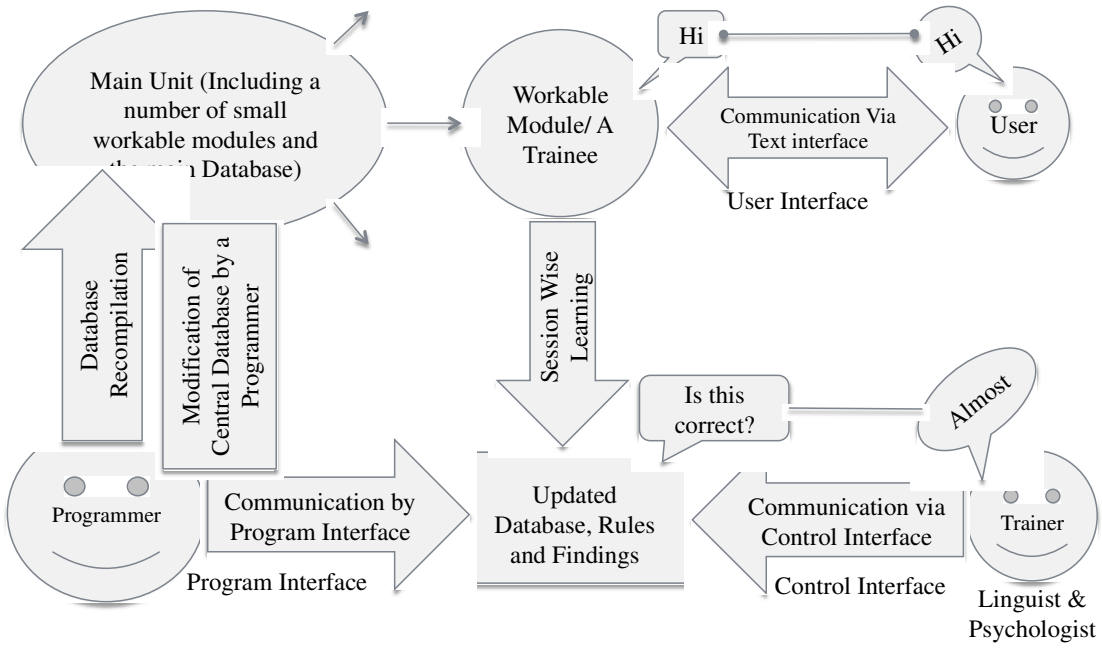

Figure 4: Schematically shown the overall Parenting Period Infrastructure

5 Sample Experimentation

For proper understanding of the proposal, a sample conversion is presented in this section between a user and an AI unit.

User: Hi
⇒*AI: Hello*
User: May I have the pleasure to know your name?

At this point, the AI can't find such a structure of conversation in its database; i.e. it does not know what the user is trying to say. Therefore, it will make a sentence with one of it's built in syntactic with the keywords **Pleasure**, **Know**, **Name**

⇒*AI: Did you mean that, you are pleased to know my name?*
User (possible answer): No, no, no. I just wanted to know your name.

Lets assume that, this time also the AI is in trouble to extract the meaning but in this case it knows the structure and carry the conversation on in a stupid way.

⇒*AI: So you wanted my name. Did you get it?*

This is how it behaves in preliminary levels, can be called as an immature stage of the AI unit.
The linguist first checks the chat history and he/ she will have a slightly different text interface to upgrade the module. Though not exactly, but will be something like the followings.

* Linguist: "May I have the pleasure to know your name?" is almost equivalent to the question "What is your name?" So what will you answer then?
⇒*AI: I am an Artificial Intelligence unit, so I do not have a name.*
* Linguist: the word **Pleasure** in that sentence is some kind of **Courtesy**. These are almost **Meaningless** but helps to **Assess** the user. And **Courtesy** should be replied by another **Courtesy**.
⇒*AI: I can understand that and updated my database according to that.*
* Linguist: If someone wants to know your name, you should also ask his/ her name. But it is not always mandatory.
⇒*AI: I can understand that and updated my database according to that.*
* Linguist: These are a few more ways in which users can ask, "What is your name?" For example....

Finally, these rule assignments are converted into instructions and machine language by a computer programmer. Afterwards, the module will behave in the following way.

User: Hi
⇒*AI: Hello*
User: May I have the pleasure to know your name?
⇒*AI: I am an Artificial Intelligence unit, so I do not have a name. But thanks for asking. What is your name?*
User: My name is Mr. X.

This is how the basic works. The AI unit will record its entire chat history and always tries to learn from the users. So, basically users are the main Information source and the linguists in some sense can be said as **Confirmation source**.

6 Conclusion

The approach presented here is basically an effort to overcome the limitations of traditional AI and make the development process a lot faster. In this proposition, the involvement of the scientists and the linguists together implies the methodology to learn about 'How to Learn'. Linguistics is basically the science of language; a linguist knows the art to teach, the magic of using language, ways to continue a bold conversation. Hence, a co-operative effort, an Integration of knowledge will certainly speed up the fictions of today to be real. There is no doubt that, the successful implementations of such AI unit will devastatingly change the whole architecture of the civilization and hopefully towards the good. The applications of these units are simply uncountable; most of them are almost impossible to imagine with the help of present resources. The whole world is working with this challenge these days. Here, within this short enclosure, no specific model was possible to introduce, neither was it tried. This work is an effort to encourage people of different disciplines to work co-operatively. Some basic introductory modules are proposed to explain the methodologies of sharing the skills. Though, these discrete modules are far behind from being a complete system, they still offer an upgrade without any doubt.

References

[1] *Wikipedia, the Free Encyclopedia.* "History of artificial intelligence." Accessed on May 31, 2011. <http://en.wikipedia.org/wiki/History_of_artificial_intelligence>

[2] *Pylyshyn, Zenon W.* "Artificial Intelligence." The Canadian Encyclopedia. Accessed on May 31, 2011. <http://www.thecanadianencyclopedia.com/index.cfm?PgNm=TCE&Params=A1ARTA0000339 >

[3] "*Directory of Bots on the Web,*" "*Chat Robot Patents.*" A.L.I.C.E. Artificial Intelligence Foundation. Accessed on May 31, 2011. <http://www.alicebot.org/mailing-lists.html>, <http://www.alicebot.org/patents.html>

[4] *Wikipedia, the Free Encyclopedia.* "Computational Linguistics." Accessed on May 31, 2011. <http://en.wikipedia.org/wiki/Computational_linguistics>

[5] *Bolshakiv, Igor and Gelbukh, Alexander.* "Computational Linguistics." Mexico: Dirección de Publicaciones, 2004. ISBN 978-0-87352-297-7.

[6] *Birner, Betty.* "Language Acquisition." Accessed on May 31, 2011. <http://www.lsadc.org/info/ling-faqs-lang_acq.cfm>

[7] *University of Idaho College of Science (2004).* "Amygdala." Accessed on May 31, 2011. < http://www.sci.uidaho.edu/med532/amygdala.htm>

[8] *Amunts K, Kedo O, Kindler M, Pieperhoff P, Mohlberg H, Shah N, Habel U, Schneider F, Zilles K (2005).* "Cytoarchitectonic mapping of the human amygdala, hippocampal region and entorhinal cortex: intersubject variability and probability maps." Anat Embryol (Berl) 210 (5–6): 343–52. doi:10.1007/s00429-005-0025-5.

[9] *Adaptive A.I. Inc.* "What exactly is AGI, and how does it differ from conventional AI?" Accessed on May 31, 2011. http://www.adaptiveai.com/technology.html

Nishatul Majidcompleted his MS and B.Sc. from the Department of Applied Physics, Electronics and Communication Engineering, University of Dhaka, Dhaka, Bangladesh. Now he is working as a Lecturer in the same department. His research interests are in the field of Quantum Computing and Artificial Intelligence.

Tasnubha Bablycompleted her Graduation and Post-Graduation from the Department of English, University of Dhaka, Bangladesh. Now she is working as an Assistant Professor in English Language Institute, United International University, Bangladesh. Her research interests are in the field of material design and computational linguistics.

Factors Influencing Teachers' Laptop Purchases

Shamsunnahar Tania

Abstract— Having a Laptop, nowadays, is an essential need than a luxury. Laptops play a governing role among various professionals especially among learners. This study examines the various issues and factors responsible for purchasing a Laptop by teachers' community of different private universities in Dhaka city. The Study revealed that 58% of the male faculties and 42% female faculties use Laptop for their professional life. The most preferred brand for the university teachers is HP which is about 30% of the available market brands. About 70% of teachers use Laptops for their academic purposes. We found 60% faculties were satisfied with their used brand. The research also showed that satisfaction on laptop performance greatly associated with brand, duration of use, age of the user and his/her professional status. We found that Branding, Technical Features, Special features, Values, Mobility are the five factors that influence consumers' laptop purchases. This research also seeks to evaluate the differences of the factors influencing consumers' laptop purchases between male and female teachers.

Keywords— Factor, teacher community, purchase decision, Branding.

1 Introduction

Laptop are portable, stylish and highly efficient computing devices. They make it possible to continue working at home or away from the office, accomplish schoolwork and view multimedia content. With so much of desirable functions available on these small devices, anyone can find some use for these computers, whether it is for business, work, learning or play. There are decisive studies on consumer purchase decision models in the literature, however, consumer purchase decisions vary greatly depending on the product to be purchased. Therefore, sectoral studies are needed to delineate the factors affecting consumer purchase decisions in various product markets. "Mobility wins" will be the top theme of the year as mobile devices outperform PCs by more than 2 to 1 and generate more revenue than PCs for the first time (The International Data Corporation (IDC), 2012). Dell was the number one choice worldwide with 7.9 million sales. It was followed respectively by HP (7.4 million), Toshiba (5.8 million), IBM (4.3 million), and Acer (3.9 million) in year 2010 (What Laptop 2010). Furthermore, revenue generated from notebooks has long surpassed desktops, thanks to higher average selling prices for notebooks. In addition, new product launches to the market, acquisitions and mergers in the sector, rapid developments in the nanotechnology, integrated wireless networking, and decreased prices make it extremely vital for the companies to understand the factors underlying the consumers' laptop purchase decisions. In any situation consumers are the first priority in business's marketing planning. Several questions are frequently asked by companies: who are the expected buyers? What are the consumers' want? What are the motives that influence buying decision?

The objectives of this study are to find out consumers' Purchase Pattern of Laptops, their expectations and Purchase Decisions. Initially, it is aimed to determine the factors influencing consumers' laptop purchases. Secondly, it is intended to find out whether there are differences among male and female consumers.
.

The paper is arranged as following: Section-2 of this study contains a brief review of recent literature about consumers' purchase decisions. Section-3 contains the methodology of this research including the target population, sample size determination, questionnaire design and survey method for primary data collection. Section-4 includes results of univariate, bivariate and multivariate data analysis. In multivariate data analysis, we have identified the factors influencing laptop purchase behavior of the university teachers. A summary of the research with recommendation has been presented in section-5 which is followed by a list of references.

2 Literature Review

Consumers can prefer certain products, brands or companies over others. However, consumer purchase decisions vary deeply depending on the product to be purchased. Consumers' demographic profile, purchase perceptions, and their attitudes towards products or brands influence their purchase decisions. Jarvenpaa and Tedd (1996/1997) identified many factors that affect a consumer's electronic purchase decision which include product understanding, shopping experience, customer service, and consumer risk. Geisler and Hoang (1992) identified five steps in the decision process to purchase. The authors

• *Shamsunnahar Tania is with the Department of Business Administration, Stamford University Bangladesh. E-mail: taniaju28@yahoo.com.*

Manuscript received on 12 July 2012 and accepted for publication on 25 August 2012.

© 2012 ULAB JSE

concluded that services companies follow a relatively logical and analyzable decision process.
According to decision making model, consumers process the environmental cues; the physical factors of the product, psychosocial cues, such as advertising, and consumers put these cues into a set of perceptions that shape their preferences (Hong and Lerch, 2002). Based on these preferences, consumers make their choices subject to situational constraints, such as price (Hong and Lerch, 2002). According to Hong and Lerch (2002), people evaluate various objective features when buying an IT product, and because of imperfect information and simplifications according to the decision rules people often abstract these various features into few perceptual dimensions such as 'usefulness' and 'price'. Kim et al. (2002), in another research, identified performance and price as two of the most important attributes in PC purchase decisions. Nasir V. et al. (2006) identified seven factors that influence consumers' laptop purchase decisions which are core technical features, post purchase services, price, peripheral specifications, physical appearance, value added features, and connectivity and mobility.

There are many Features to be considered while purchasing a laptop. Analyzing the purchase decision of the consumers is very important for Computer Manufacturing Companies to focus on Successive Sales and development. When deciding upon which laptop is best for someone, it needs to determine the type of work one will most frequently use the computer to perform. If it is to use to check email, browse the internet or listen to music, it doesn't need anything too powerful. However, if anyone plans to travel with computer, store many files or documents and access information then a device with a long battery life, adequate hard-disk space, a memory-card reader, and Wi-Fi and Bluetooth connections is needed.

3 Research Methodology

The target population of the study is the university teachers in different private universities in Dhaka city, Bangladesh. The primary data have been collected by using two stage cluster sampling design. From a pilot survey, it has been found that around 15% teachers (p = 0.15) use laptop, considering 5% alpha level (z0.025 = 1.96) and 6% acceptable error margin (d = 0.06), the desired sample size has been estimated by Cochran's formula (n = z2 p(1-p)/d2) as 136. At the first stage eight universities were randomly selected. The selected universities are Asian University of Bangladesh, Stamford University Bangladesh, Northern University Bangladesh, Prime University, ASA University, Uttara University, Prime Asia University and Ahsanullah University of Science and Technology. In second stage, required numbers of teachers were selected randomly following proportional allocation scheme. From 136 questionnaires few were found incomplete which were discarded. Finally 127 questionnaires were found appropriate for analysis.
In the first part of the questionnaire, the teachers were asked whether they had a laptop or not, and those who had a laptop were allowed to continue to rest of the survey. The brand name of their laptop was also asked.

One of the objectives of this study was to investigate the factors that influence teachers' laptop purchase decisions. For that purpose, a list of laptop features was stated in the questionnaires, which were gathered from the analysis of PC journals as well as personal interviews with the experts from the sector. The teachers were asked which factors they found important when they were purchasing a laptop. In this question, we used a 5-point Likert-scale that is comprised of 20 items in order to measure the factors influencing teachers' laptop purchase decisions. Few demographic questions such as age, gender, service length, marital status were also asked.

4 Data Analysis and Results

4.1 Demographic profile of the Respondents

Of the 127 respondents, approximately 42% were female whereas 58% were male; additionally, almost 54% of all respondents were under the age of 30. The average age structure of the participants of this survey is about 29 years and the average service age is 3.75 years. 45% of the respondents are Lecturer, 24% are Sr. Lecturer and 31% are Assistant Professor and Associate Professor. 35% of the teachers are single and rests are married.

Table 1: Demographic Classification of Respondent

Variable	Category	Frequency	%
Gender	Male	74	58.3
	Female	53	41.7
Designation	Lecturer	58	45.7
	Sr. Lecturer	30	23.6
	Assistant Professor	39	30.7
Marital Status	Single	44	34.6
	Married	83	65.4
Age	Below 30	68	53.5
	30 or Above	59	46.5
Service Year	3 Years or less	44	34.6
	More Than 3 years	83	65.4
Salary	Less Than 30000	74	58.3
	30000 or above	53	41.7

4.2 Brand Usage Profile of the Respondents

The participants were asked to mention the laptop brand that they were using at the time of the survey. Table 2 illustrated the frequency distribution of laptop brands by the respondents of the survey. Majority of the teachers use HP laptop; the 2nd most used laptop is Compaq which is about 21% the next popular brand is Dell and Gateway.

The respondents of this study were asked about the facts for what they had decided to purchase the laptop and also whether they are satisfied or not on their laptop performance. Of the teacher 70% bought laptop because it

was essential for them while few (20%) purchased because it attracted them and 8% bought it as they thought that it will enhance their social status in the University and rest of the teachers purchased because of other reasons. About 60% of the teachers are satisfied with their laptop performance (Table 3).

Table 2. Frequency Distribution of Laptop Brands

Brand	Frequency	Percentage
Dell	13	10.2
Acer	16	12.6
HP	38	29.9
Sony Vaio	2	1.6
Fujitsu	2	1.6
Toshiba	1	.8
Samsung	6	4.7
Compaq	26	20.5
Gateway	13	10.2
IBM	10	7.9
Total	127	100

Table 3: Classification of respondent according to laptop use

Variable	Category	Frequency	%
Laptop Use Years	3 years or less	86	68
	More than 3 years	41	32
Satisfaction using laptop	No	51	40
	Yes	76	60
Causes of laptop purchasing	Academic Need	89	70
	Friends	2	2
	Social Status	10	8
	Attraction to laptop	26	20

We tried to find out whether there is any relation between satisfaction of laptop performance and few key issues. We found that male and female teachers are equally satisfied with laptop performance and also service year has no significant influence. Brand of the laptop has a great impact on satisfaction on laptop performance. Year of using laptop, age of the respondent and professional status are highly associated with satisfaction (Table 4).

Table 4: Satisfaction of laptop behavior and various key issues

Variables	Chi-Square	P-Value	Significance
Satisfaction vs. gender	.004	0.559	Insignificant
Satisfaction vs brand of laptop	76.328	0.000	Significant
Satisfaction vs.year of using laptop	46.163	0.000	Significant
Satisfaction vs age group	28.366	0.000	Significant
Satisfaction vs service year	.861	0.246	Insignificant
Satisfaction vs profession status	23.415	0.000	Significant

4.3 The Consumers' Laptop Purchase behavior

Buying a laptop can be expensive, and therefore, a significant amount of time is put into which one is bought. Buying a laptop can be a headache at times, but not if there are a set of principles set in motion to make the decision on which laptop should be purchased.

One important factor to consider when buying a laptop is the price. If everything else is perfect about the computer, but there is not enough money to buy it, then there is no need to continue looking at that model. Laptop's style some times seems very important. For example, if a person likes a thin laptop, then this should be a factor to consider. If a person is going to be carrying it around in public all of the time, then they are going to want something more durable. The size of the screen as well is an important factor when buying a laptop. Some people like the small screens, while others like the wide-screen. The web-cam and microphone features are important to some people when deciding on a laptop. If people are going to use video chat, then they would want to have a web-cam and microphone built-in to the laptop. Surely brand of laptop is an important factor for buying the computer. Sometimes, stores will offer free accessories with the buy of a laptop. This is always a good incentive if something else will be received free and is a good reason to buy that laptop.

Consumers (teachers), who participated to this survey, were given a list of features related with laptops and then they were asked to show how important these features for them while purchasing a laptop. Respondents who found a feature "very important" gave "5" to that item while others who found it "Not at all important" gave "1". Hence, as it is seen in Table 3, battery backup time, brand, satisfaction, product warranty and price are the top five features which had the following highest mean values respectively: 4.56, 4.54, 4.54, 4.38 and 4.34. It was also noteworthy to mention that all the features listed in the survey were considered important by the respondents since the lowest mean value is 2.64 for the social status.

Table 5: Importance of Laptop Features in Consumers' Purchase Decisions

ITEMS	N	MEAN	STD. DEVIATION
Battery backup time	127	4.56	0.498
Brand	127	4.54	0.664
Satisfaction	127	4.54	0.710
Product warranty	127	4.38	0.642
Price	127	4.34	0.607
Power supply	127	4.16	0.648
Hard disk size	127	4.11	0.769
Ram size	127	4.11	0.748
Processor speed	127	4.06	0.885
Processor type	127	4.03	0.786
After sales service	127	3.97	0.863
Weight	127	3.86	1.193
Reliable distributor	127	3.83	0.977
Water resistance	127	3.61	0.977
Outlook	127	3.60	0.670
Monitor size	127	3.56	0.650
Promotional activities	127	3.47	1.147
Webcam	127	3.38	0.796
Color	127	3.02	1.065
Social status	127	2.66	0.919

4.4 Factors Influencing Consumers' Laptop Purchase Decisions

To identify the factors influencing laptop purchase decision of the university teachers, we used factor analysis technique. The most important aspect of the factor analysis is the extraction of crucial factors. It is a statistical technique that attempt to represent relationships among sets of interrelated variables by a smaller set of variable which are relatively independent and interpretable, but not directly observable. One of the goals of factor analysis is to represent relationships among sets of variables parsimoniously.

Teachers were asked to rate the importance on a 5 point scale while purchasing a laptop for the variables: brand, price, hard-disk size, RAM size, processor type, processor speed, color, social status, promotional activities, battery back-up time, monitor size, power supply, product warranty, outlook, reliable distributor, after sales service, weight, water resistance, webcam and overall satisfaction. We have considered these variables for factor analysis.

Testing appropriateness of factor model

However, prior to factor analysis, the reliability analysis for the variables is conducted. Later, in order to find out whether our data fit factor analysis or not, we have also utilized KMO and Bartlett's test. Bartlett's test of sphericity indicates whether the correlation matrix is an identity matrix, which would indicate that the variables are unrelated. Table 6 presents the significance level of this test. Very small values (less than 0.05) indicate that there are probably significant relationships among the variables. A value higher than about .10 or so may indicate that the data are not suitable for factor analysis. Since the significance level of our data is 0.00, it can be concluded that the data of this study is suitable for factor analysis.

Table 6: KMO and Bartlett's Test

Kaiser-Meyer-Olkin Measure of Sampling Adequacy.		.366
Bartlett's Test of Sphericity	Approx. Chi-Square	3062.68
	df	190
	Sig.	.000

Identification of the factor model

We have used Scree plot to determine the appropriate number of factors, an elbow has been observed in the Scree Plot (Figure-1). The number of components is taken to be the point at which the remaining Eigen values are relatively small. It is observed that an elbow occurs at component number "5", in this case, it appears that 5 sample principal components effectively summarize the total sample variance. Here a model with five factors appears to be reasonable. We have used principal component solution for identification of the factors.

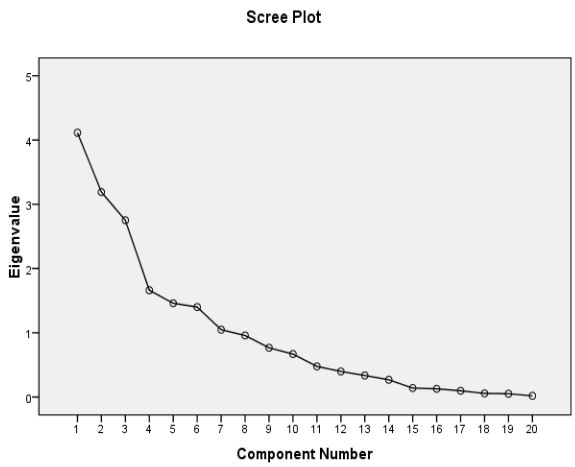

Figure 1: Scree plot for determination of number of factors

Rotation of factors

The factor matrix contains the coefficients used to express the standardized variables in terms of factors. These coefficients, factor loadings, represent the correlation between the factors and variables. A coefficient with a large absolute value indicates that the factor and variables are closely related. The coefficients of the factor matrix can be used to interpret the factors. In this type of complex matrix, it is difficult to interpret the factors. Therefore, through rotation, the factor matrix is transformed into a simpler one that is easier to interpret. The most commonly used method for rotation is the Varimax procedure. Here we have used Varimax with Kaiser Normalization as rotation method. We have used the following rotated matrix to identify variables involved in each factor.

Table 7: Rotated Factor Matrix

	Component				
	F1	F2	F3	F4	F5
satisfaction	.870				
Brand	.862				
After sales service	.794				
Reliable distributor	.755				
Promotional activities	.610				
Processor type		.810			
Ram size		.802			
Hard disk size		.775			
Processor speed		.763			
Battery backup time			.762		
Product warranty			.745		
Water resistance			.535		
Price				.815	
Outlook				.712	
Social status				.680	
Webcam					.845
Monitor size					.795
Weight					.673

Extraction Method: Principal Component Analysis.

Principal components method is used while conducting the factor analysis. As it can be seen in Table 7 & Table 8, 20 variables were grouped under five factors. The results of the factor analysis show that 69% of the total variance is explained by classifying these 20 variables into 5 components. Varimax rotation has been used to see which variables load together. The first factor is composed of satisfaction, brand, after sales service, reliable distributor and promotional activities and it corresponds to an eigenvalue of 2.879 and this factor has the power to explain 19% of the variance; this factor is named as "**Branding**". Processor type, ram size, hard disk size and processor speed were the variables that constituted the second factor with an eigenvalue of 2.79 and 16% of explained variance. Hence, the second factor is called as "**Technical Features**". Battery back-up time, product warranty and water resistance facility were grouped under the third factor, which is named as "**Special Features**", and this factor has an eigenvalue of 2.35 and 13% of explained variance. The fourth factor is made up of price, outlook and social status, hence this factor is named as "**values**", and it has an eigenvalue of 2.20 and 11% of explained variance. Finally, the fifth factor, namely "**Mobility**" is the factor with an eigenvalue of 1.976 and 10% of explained variance, and this factor is composed of the following variables: webcam, weight and monitor size.

Table 8: Factors Influencing Consumers' Laptop Purchases

Factors	**Eigen value** Factor Loading	**% of Variance**	**Cumulative %**
F1: Branding	2.879	19.125	19.12
F2: Technical Features	2.790	15.813	34.94
F3: Special features	2.358	13.192	48.13
F4: Values	2.207	10.887	59.02
F5: Mobility	1.976	10.103	69.12

Differences between Male and Female Regarding the Factors Influencing Laptop Purchases

After determining the factors influencing laptop purchase decisions of consumers, we try to find out whether there are differences between male and female regarding these factors. Therefore, one-way ANOVA analysis is conducted, and it is found that "**Branding**" and "**Mobility**" factors show a significant difference between two groups with an F value of 4.882 and 5.346 and a significance value of 0.041 and .022 respectively. Table 9 illustrates that these two groups of consumers did not show significant differences from each other, except the "**branding**" and "**mobility**", with respect to the factors that are influencing their laptop purchase decisions at the significance level of 0.05.

Table 9: Differences between Male and Female Regarding to Purchase Decision Factors

ANOVA

		Sum of Squares	df	F	Sig.
Branding	Between Groups	3.796	1	4.882	.041
	Within Groups	122.204	125		
	Total	126.000	126		
Technical Features	Between Groups	1.477	1	1.483	.226
	Within Groups	124.523	125		
	Total	126.000	126		
Special features	Between Groups	1.482	1	1.488	.225
	Within Groups	124.518	125		
	Total	126.000	126		
Values	Between Groups	.709	1	.708	.402
	Within Groups	125.291	125		
	Total	126.000	126		
Mobility	Between Groups	5.168	1	5.346	.022
	Within Groups	120.832	125		
	Total	126.000	126		

5 CONCLUSIONS

The demand for technology-enhanced learning environments undoubtedly will grow substantially over the next decade as society, the academic community, and students continue to expect the educational process to employ technology comparable to that found in the real world. This study has provided an empirical glimpse into the minds of teachers as to what they perceive as critical factors in a laptop purchase. The findings revealed that all the independent variables have influences on laptop purchase and this study found five factors which influence consumers' laptop purchase decisions. These factors can be stated as follows: **Branding, Technical Features, Special Features, values and Mobility**. On the other hand, male and female consumers demonstrate a significant difference in two factors: branding and mobility.

From the managerial perspective, the findings of this study imply that when a consumer decides to buy a new laptop, the company should consider the type of customers, their purpose and the characteristics. However, since all consumer groups (male and female) find **Branding** and **mobility** extremely important, these features should be emphasized in advertisements.

This research finding can also benefit laptop providers who would want to reach out the university teachers as their targeted market. This study recommends companies to invest in technology through R&D and create differentiation at utmost level. This research has been limited to laptop sector and the factors influencing consumers' purchase decisions in this market, since sectoral differences play a vital role, it is also recommended to replicate this study in distinct sectors.

ACKNOWLEDGMENT

The author wishes to thank Md. Manzur Rahman Farazi

and Md. Rezaul Karim of the Department of Statistics, Jahangirnagar University, Savar, Dhaka, Bangladesh for their constructive suggestions.

REFERENCES

[1] IDC. "IDC Predictions (2012). "IDC Predictions 2012: Competing for 2020". Available online:
http://cdn.idc.com/research/Predictions12/Main/downloads/IDCTOP10 Predictions2012.pdf

[2] What Laptop (2010). "Laptop Sales 2010". Available at: http://www.whatlaptop.co.uk/ YadSKtRo-WckGQ.html

[3] Jarvenpaa, S., and Todd, P. (1996/1997). "*Consumer Reactions to Electronic Shopping on the World Wide Web*". International Journal of Electronic Commerce. 1 (2), 59-88.

[4] Geisler, E. and Hoang, W. (1992). "*Purchasing Information Technologies: Behavior Patterns in Service Companies*". International Journal of Purchasing and Materials Management. 28 (3), 38-42.

[5] Hong, Se-Joon, Lerch, F.Javier (2002). "*A Laboratory Study of Consumers' Preferences and Purchasing Behavior with Regards to Software Components*". ACM SIGMIS, 33 (3), 23-37.

[6] Kim, N., Han, J. K., and Srivastava, R. K. (2002). "*A Dynamic IT Adoption Model for the SOHO Market: PC Generational Decisions with Technological Expectations*", Management Science, 48 (2), 222-242.

[7] Dillon, T., and Reif, H. (2004). "*Factors Influencing Consumers' E-Commerce Commodity Purchases*". Information Technology, Learning and Performance Journal. 22 (2), 1-12.

[8] Sudhakar R. "*A study on various factors influencing students' laptop purchases among various student's in vit university, vellore, tamil nadu, india*".

[9] Ganesh, J., Arnold, M. and Reynolds, K. E. (2000). "*Understanding The Customer Base of Service Providers: An Examination of The Differences Between Switchers And Stayers*", Journal of Marketing, 64 (3). 65-88.

[10] Hair, J., Anderson, R., Tatham, R., and Black, W. (1998), Multivariate Data Analysis, 5th Edition. New York: Prentice Hall.

[11] Majid Behzadian Mohammad Hasan Aghdaie Hamid Reza Razavi (2011) *Iranian Students' Preferences for Laptop: a Conjoint Analysis*, European Journal of Economics, Finance and Administrative Sciences, ISSN 1450-2275 Issue 39 (2011)

[12] Nasir V. Aslıhan, Yoruker S, Güneş F and Ozdemir Y (2006) *Factors Influencing Consumers' Laptop Purchases*, 6th Global Conference on Business & Economics, ISBN : 0-9742114-6-X, OCTOBER 15-17, 2006 Gutman Conference Center, USA

[13] Rachel V. McClary (2006), *An Evaluation Of Consumer Buying Criteria And Its Impact On The Purchase Of Commoditized Laptops*, A Dissertation Presented in Partial Fulfillment Of the Requirements for the Degree Doctor of Philosophy, Capella University, December 2006.

Shamsunnahar Tania is currently working as a Lecturer (Statistics) at the Department of Business Studies, Stamford University Bangladesh, Dhaka. She completed her B.Sc. and M.Sc. in Statistics from Jahangirnagar University. Her research is mainly focused on Applied-statistics.

ICT-Supported Interactive Learning in Engineering Education: Bangladesh Context

Md Kabirul Islam

Abstract— Proliferation of ICT in teaching and learning in higher education is still very slow in Bangladesh, but this modern technology has been an integral part of education in western universities. This study has examined the under-graduate and post-graduate students' responses to a Learning Management System (LMS) Moodle introduced first time ever by a private university in Bangladesh. The students were asked, in face-to-face classes, to participate in online interaction on weekly tasks given by the teacher. Students' learning activities in LMS were monitored and required facilitations were provided. At the end of the course, a questionnaire was administered to understand students' views of the LMS. The result revealed that the level of student participation in LMS was low, but Interaction occurred among a few post-graduate students in the discussion folder. The quality of their messages was appreciable in terms of knowledge acquisition.

Keywords— Collaborative Learning, Learning Management System (LMS), Blended Learning.

1 Introduction

Collaborative leaning is an umbrella term for a variety of educational approaches involving joint intellectual effort by students and teachers for a common purpose [13]. In western universities, in face-to-face setup, usually students are working in groups mutually searching for understanding, or solutions. Previous studies have found that this kind of student discourse occurs in an ICT-supported learning environment [4], [3], [21], [19], [11], [15]. As a university teacher this author has perceived that university students in Bangladesh are quite unfamiliar with collaborative learning and its benefits.

In the face-to-face teaching and learning setup in Bangladesh, the lecturing method is considered by the teachers as the main method regardless of the subject and grade level. In this face-to-face situation, the teacher is responsible for delivering the lecture materials according to certain plans. The students are expected to listen to lectures and to remember them when asked to submit an answer to a question to ensure that the students understand the topic. A kind of 'teacher-student' interaction is present although the scope is very limited. In the class normally students are not given any activity or task to discuss among themselves, nor are they getting an opportunity to present their ideas. In fact, the aspect of sharing ideas and acquiring knowledge through interaction among students is almost absent [24]. The educational activities are basically teacher-centred. The concept of 'interaction between students' and its effect on students' understanding have been ignored in the current situation. As a result, listening, reading, and remembering the ideas acquired have become a practice of learning and passing the examination.

Md Kabirul Islam is with the Department of Computer Science and Engineering of Daffodil International University, Dhaka, Bangladesh. E-mail: kislam@daffodilvarsity.edu.bd

Manuscript received on 28 August 2012 and accepted for publication on 8 October 2012.

In the recent years, the number of internet users has increased greatly in Bangladesh, and most of the universities have good internet facilities [12]. Nowadays majority of the university students are skilled with the computer and the internet regardless of their course of study. Now the question arises: how the students with no or little familiarity with their discourse do respond in an ICT-supported collaborative learning environment?

This study will examine in what ways the students studying at a university in Bangladesh behave in a technology-supported learning environment. The courses offered were based on a blended approach.

2 Literature Review

The strands of literature in this section are collaborative learning, theoretical basis of online collaborative learning, and blended learning and use of online facilities based on previous research.

2.1 Collaborative Learning

Collaborative learning may be defined as students in the same grade (level) working together on a topic for a common purpose. In face-to-face teaching-learning situation, social interaction among students enrolled in the same course of study is viewed as fundamental to achieving learning [5], [22] which is consistent with Vygotsky [24] who establishes that students construct knowledge through social interaction with their peers. Vygotsky's [24] theory emphasises that the range of potential each learner has for learning when the learning is designed by the social environment in which it accomplishes is greater than the actual ability of the individual learner when the learning is facilitated solely by someone with greater expertise [25]. Furthermore classroom learning is promoted greatly when students are involved in group interaction within members of their communities [13]. Zurita and Nussbaum [28] summarised five factors for effective col-

© 2012 ULAB JSE

laborative learning from previous work. These are (i) individual student responsibility to learn with the group and contribute where possible, (ii) helping to teach other members of the group through frequent exercise of social skills during group interactions, (iii) team members should reach their individual goals which is an indication for their success, (iv) decision making must employ members' ability to exchange opinions and build consensus, and (v) Discussion, social interaction, and consensus building can be achieved in small groups.

2.2 Theoretical Basis of Online Collaborative Learning

Different web-based Learning Management System (LMS) may be used for creating online collaborative learning environment. It can be designed on the understanding that web-based computer-supported systems can support and facilitate group processes and group dynamics in ways that are achievable by face-to-face [32], but online interaction differs in quite important ways from face-to-face discourse [31]. Many theories especially Social Constructivist theory supports above understanding of online collaborative learning [30]. From theoretical point of view, online collaborative learning aims at providing both an authentic environment and multi-perspectives that can tie in students' prior knowledge [9]. The web-based systems are cognitive tools that can team individuals of a peer group with the technology to form a joint intelligence which shares the labour during the group interaction in the form of textual message posting [14]. An explicit goal of this environment is to facilitate deep understanding. This kind of computer-mediated communication offers teachers the opportunity to create an environment of learning that enables students to discuss the task and acquire skills through reflection on the task and evaluation of students' messages [9]. It allows teachers help students to construct their knowledge using their experience and provide guidance in their meaning making process. The technology or the teacher can support and stimulate students' activities that engage them in thinking, understanding the instructions and presenting ideas intellectually about the topic or the task [15].

2.3 Blended Learning and Use of Online Facilities in Learning

Across the world there has been an increase in the use of information and communication technology in higher education, especially in western universities, although the technologies themselves may vary, from video-conferencing to LMS, CD ROMs and Smart Phones. For example, in the UK by 2005 over 95% of institutions of higher education supported a Virtual Learning Environment (VLE) and the term 'blended learning' is now commonly used to refer to the mix of face-to-face and e-learning that constitutes the higher education experience of students [4]. Several studies conducted by previous researchers in higher education illustrate the impact of blended learning, learners' perceptions, and teacher's role. Some of the studies are reviewed in this section. The online environment was created with different learning management systems.

Livingstone and Condie [16] investigated the impact of ICT on learning and teaching in a higher education course that integrated traditional classroom teaching with online component for student learning. The results showed that the student used online facilities (resources, interaction facility, assessment task etc.) considerably more than expectations of their teachers, and the students preferred a blend of learning experiences using materials and more conventional printed text-booklets. The use of online facilities improved students' skills in accessing the internet and other computing abilities. A similar study was conducted by Rye [20] where students felt that ICT would be important for their study as they can have ready resources from their teachers and information from their classmates, although only a few of them used the online learning system regularly. Woo, Gosper, McNeill, Greg, Green, and Phillips [26] found WBLT (Web-based Learning Technologies) has positive impact on student learning as they can communicate with each other for sharing experience and views. Students felt the web-based learning activities are new experiences for them, especially in responding to others' messages [19]. However, academic guidance is needed on what and how to use the technology effectively for independent and self-directed learning, even at that institution also where ICT skills level of students are high [4]. Moreover, in order to maintain high quality learning appropriate assessment plans and adequate facilitation must be particularly reinforced [19].

Content analysis of online discussions revealed different patterns of students' interaction for knowledge constructions [10], [27]. The researchers observed that students performed online interactions by posting textual messages that contributed to the knowledge construction at different levels from simply sharing facts, opinions and experiences to elaborating one's own or others' ideas, to applying and transferring knowledge in practices. However teachers in online classes may promote students' motivation by giving relevant and accessible discussion tasks [10].

The students who have poor attendance in face-to-face classes may benefit from engaging in a Virtual Learning Environment for their learning and that may improve their assessment performance [17]. But students' absences from face-to-face class could suffer from a poorer learning experience if they choose not to attend the face-to-face lecturers [26] in a blended learning approach.

Previous researchers suggested that the facilitation tasks include providing feedback to learners, promote interaction and specific comments on the discussed issues with summarization at the end of class discussions [6], [18] and intervening and promoting students' participation in the discussion in various ways when it becomes quiet [1], [18]. Encouraging students to provide timely responses and feedback to class members helps boost the students' sense of participation and learning in online learning communities [7] and to develop a sense of becoming more responsible, self-directed learners, and to learn in a more collaborative, authentic and responsible way [19]. Some online facilitators reinforced students'

interaction and engagement by laying out clear assessment specifications and setting aside a high percentage of the grade to the class-level online discussion activity [18], [23].

The literature review indicates that blending learning approach with an online component provides enormous prospect for student collaboration both on-campus and off-campus and teacher's support to promote learning.

3 The Study

This study was conducted at Daffodil International University (DIU) in Dhaka City in Bangladesh. DIU has created a web-based teaching and learning environment using open source LMS 'Moodle' as part of the university's E-education Programme to provide students with an extra support for communication with their teachers and fellow students in addition to scheduled face-to-face classes.

In spring 2011 (semester) LMS Moodle was used for four under-graduate and one post-graduate groups of students enrolled in different courses. The number of students in each section is presented in Table 1.

Table 1: Number of students enrolled in different courses

Course	Section	Level	Number
Physics II, CSE	A	Under-graduate (semester 2)	31
Physics II, CSE	B	Under-graduate (semester 2)	30
Physics I, TE	A	Under-graduate (semester 1)	40
Physics I, SWE	A	Under-graduate (semester 1)	40
eCommerce, CSE	A	Post-graduate	13

Note: CSE-Compute Science and Engineering, TE-Textile Engineering, SWE-Software Engineering

Most of the under-graduate students had different levels of computer literacy as they used e-mail and facebook. But all post-graduate students of CSE were well conversant with ICT. Majority of the students selected for this study had required information literacy and ability to use a learning management system for their learning. The students comprised both male and female. Out of 13 post-graduate students eleven had a job. The students were given an orientation on different features of Moodle, registration process, and teaching and learning process using Moodle in the face-to-face classes. The above courses (Table 1) were created for each section (group) in the Moodle. Moodle consists of several features such as course information, news, calendar, and Forum for posting lecture materials including the discussion task. During the semester, each group of students was given weekly discussion tasks for several weeks related to their face-to-face lecture topic and asked to response to the tasks individually and then participate in interaction with their fellow students. No students had previous familiarity with learning management system or e-Learning.

The study sought to answer the following research questions:

1. Do students use Moodle to respond to the teacher's task?
2. Do students participate in online interaction on the task set?

Students' participation in weekly discussion folder was ob-served, and the textual messages of each group were count-ed. Students' experiences of using Moodle were collected in several face-to-face meeting throughout the semester. At the end of the course, a questionnaire was administered to collect students' experience of using Moodle for their learning. Both quantitative and qualitative data analysis techniques were utilised..

4 Results

4.1 Frequency of Online Message Posting

Two groups of first semester students (TE and SWE) and two groups of second semester students (CSE- A, and CSE- B) were given discussion tasks for two and three weeks respectively. The number of messages posted by these students in response to the tasks is given in Table 2.

The number of students posted messages in response to the teacher's task varied in different groups. Quantitative analysis of message posting showed that messages posted by individual students varied from one to four. Although the number of messages posted by the student was low, it is satisfactory from teacher's point of view as the system is absolutely new to the students. Some students reported that they could not access to the Moodle or failed to do registration. It was found that some students posted messages using another student's ID. This may indicate that they were motivated to use the system but could not respond to the task in a timely manner. At least 10% of the total under-graduate students participated in this study had lack of sufficient internet or computer literacy which indicates that unskilled position might prevent them for going online. At least 10% students had internet access at home and most of them responded to the task from home.

The course teacher monitored student message posting and made comments on students' ideas. The teacher responded to individual student who posted a message to make their understanding clear about the topic and encourage them for further message posting. The teacher posted a total of 43 messages in different weeks for four groups of under-graduate students. In face-to-face meeting, students reported that they had limited Internet facilities in the department for posting messages in Moodle.

Post-graduate students posted a total of 84 messages in four different weeks in the discussion folder. The average number of messages posted by these students is about 6.4. It was found that each student posted at least one mes-

sage in every week's discussion. The teacher posted 20 messages for facilitating this group.

Table 2: Number of messages posted by students in moodle

Week	Under-grad First semester		Under-grad Second semester		Post-Graduate
	SWE (A) *N= 40	TE (A) *N= 40	CSE (A) *N= 31	CSE (B) *N= 30	CSE *N= 13
Week 1	19	34	20	21	15
Week 2	15	33	17	17	21
Week 3	-	-	20	27	33
Week 4	-	-	-	-	15
Total	34	67	57	65	84
% of students participated	50	72.5	67.7	60	100
Teacher's messages	8	9	11	15	20

**N is the number of students enrolled in the section*

4.2 Student Online Interaction

In under-graduate courses, very few interactions took place between students and that was not content related. They responded to their fellow students to support one's posting or encourage fellow students by giving thanks. This kind of response is quite good rather than remaining silent. This group of student is termed 'silent students' in this study. The data from questionnaire and face-to-face interaction with students show that the students who responded to the given tasks have acknowledged that the textual messages enhanced their understanding of the topic after reading others' postings and teacher's feedback and comments [10].

In Electronic Commerce class, post-graduate students were involved in asynchronous interaction with their fellow students, but few students participated in different weeks. However message posting on the task set continued for the whole week. It was found that the level of interaction be-tween students and its quality was encouraging. An example of student interaction is given below:

The pattern of student interaction presented in Figure 1 shows that Student 2 made positive comments on a posting of Student 1 who responded to the task and asked for further clarification, which means that Student 2 sought help from Student 1. Student 1 explained the term requested by Student 2 in the next stage. The course teacher encouraged Student 1 and posed questions to him, and consequently Student 1 appeared again to answer teacher's questions confidently.

In the above interaction, asking questions, sharing ideas and helping fellow students occurred during class discussions in Electronic Commerce course. The teacher's facilitation may have promoted their message posting and further under-standing of the topic. It appears that three types of interaction happened in the Forum (weekly discussion folder) such as student-content, student-student and student- course teacher [2].

Student 1 (Responded to the weekly task)
……After that I have compared most of the criteria which are given bellow.
1. Generation of traffic,…….
Student 2 (Responded to Student 1)
Nice work. I'm not clear about the meaning of "Generation of traffic"
Student 1 (Replied to Student 2)
Thanks for your question and sorry for the late reply. Generation of traffic means getting more visitors to your website or blog. Or it is about getting more subscribers, i.e., Building your list of users or visitors on your website or blog. ……Thanks,
Course Teacher to Student 1
Thanks for your answer to (Student 1). I have another question to you. How do you assess 'Generation of Traffic' as an observer or user? Is there any indication to understand this?
Student 1 to Course Teacher
Thanks for your question. Web traffic is the amount of data sent and received by visitors in a website. It is a large portion of Internet traffic. This is determined by the number of visitors and the number of pages they visited. …….....

Figure 1: Pattern of student interaction in e-Commerce class.

5 Discussion

It is mentioned earlier that in the universities of Bangladesh the students are not very much familiar with peer group interaction or collaborative learning. The students have very limited scope for sharing ideas and experiences in the class. The main intention of this study was to examine how the students with little familiarity with interaction behave in an online environment where communication happens only by posting textual messages.

This study sought to answer two research questions. The first research question is: Do students use Moodle to respond to the teacher's task? The results show that the under-graduate students were motivated for using the online sys-tem (Moodle) for their learning where they contributed different levels of messages although the facilities available for posting messages were very limited. The number of messages posted by the students was low [20] and not all students posted messages in a particular week [29]. In Bangladesh context, it is not surprising as the students had limited facilities to access Moodle in the campus, and they had English language barrier as well. The under-graduate group comprised both first and second semester students. Although this group had very little familiarity with the computer and the internet but more than 50% student contributed messages to the weekly discussion folder which indicates that they were motivated for using online facilities [16]. The post-graduate students possessed adequate skills [4] for using

the learning management system and their contribution to the discussion folder was much higher than the undergraduate group. The course teacher had the opportunity to encourage students in both face-to-face and online classes [4]. This is an advantage of this blended approach of the course.

The second research question is: Do students participate in online interaction on the task set? The findings of the study reveal that the interaction between undergraduate students in the weekly discussion folder was sporadic, and there was no content related interaction between students. Presumably the students' had inadequate knowledge of the content of the task, lack of facilities and lack of confidence, and difficulty in understanding English language [8]. Among 13 post-graduate students in Electronic Commerce Course, few took part in interaction for sharing experiences and supporting fellow students [27]. This indicates that students can be directed towards collaborative learning if opportunity is given, and there is a strong possibility that they might be able to take responsibility of their own learning with limited teacher's support [19].

6 A Model of Online Message Posting in Moodle

The findings suggest that the teachers attempted to promote message posting and interaction through posting discussion tasks in the forum and providing feedback to students in discussion. These strategies appeared to be insufficient and his/her effort had a limited success since the number of messages posted was low and there was 'silent' behavior from some students in responding to the task in each course. Hence three aspects are related to message posting such as the discussion task, teachers' support, and students' participation in discussion [10]. A single factor cannot explain message posting properly. The above three aspects the discussion task, teachers'

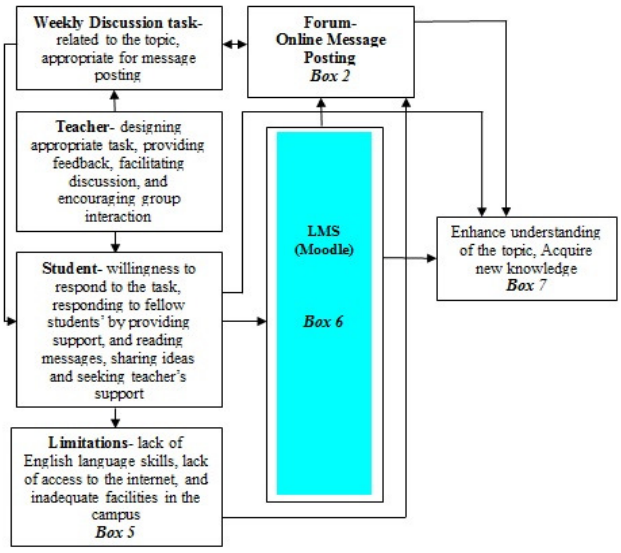

Figure 2: A model of online message posting in Moodle.

support, and students' online interaction are interrelated which is illustrated in Figure 2.

7 Conclusion

The participants in this study had a range of experience of using the internet. On the basis of the findings, it may be assumed that the students do not have any technology phobia, and adaptation of a new teaching and learning environment would be possible for them if adequate support [19] is provided. This might have a positive impact on their learning [26].

In essence, transition from traditional method of delivering lectures to student-centred participatory method may be difficult for the university faculties in Bangladesh, but it is not entirely impossible. The findings of the study suggest that students may gain collaborative learning experience by using web-based learning environment and acquire skills in responding to fellow students if proper facilitation and guidance are available.

References

[1] Auyeung, L. H. 2004, 'Building a collaborative online learning community: a case study in Hong Kong,' Journal of Educational Computing Research, 31 (2) 119–136.

[2] Anderson, T. 2005. 'Distance learning– Social software's killer ap?' Available online: http://www.unisa.edu.au/odlaaconference/PPDF2s/13%20odlaa%20-%20Anderson.pdf

[3] Bekele, T. A. 2008, Impact of Technology-supported Learning Environment in Higher Education: Issues in and for Research, Unpublished Doctoral Thesis, University of Oslo, Norway.

[4] Deepwell, F. Malik, S. 2008, 'On Campus, but out of class: An Investigation into Students' Experience of Learning Techologies in their self-directed Study', ALT-J, 16 (1) 5-14..

[5] Dillenbourg, P. (ed), 1999, Collaborative Learning: Cognitive and Computational Approaches, Pergamon, Oxford, Engladn.

[6] Graham, C., Cagiltay, K., Lim, B., Craner, J. & Duffy, T. M. 2001, 'Seven principles of effective teaching: a practical lens for evaluating online courses'. Available online: http://technologysource.org/article/seven_principles_of_effective_teaching

[7] Gilbert, N. J, Driscoll, M. P. 2002, 'Collaborative knowledge building: a case study,' Educational Technology Research and Development, 50 (1) 59–79.

[8] Evans, T. and Trezenga, K. 2002, 'Asian Students' Experience of Studying Overseas Courses', in Advancing Open Learning in Asia, eds. D. Murphy, S. Shin, & W. Zhang, Open University of Hong Kong Press, Hong Kong.

[9] Harasim, L. 1996, 'Computer Networking for Education,' in International Encyclopedia of Educational Technology, Second Edition, eds. T. Plomp, D. P. Ely, Pergamon, New York.

[10] Islam, K. 2003, 'A Case Study of Student Participation in Discussion in an Online Higher Education Course, unpublished Ph.D. thesis, Victoria University of Technology.

[11] Islam, K. 2011, ICT in Learning: DIU Initiative, The Independent, July 01, Dhaka.

[12] Islam, Y. 2011, 'Tertiary Education in Bangladesh- Brief History, Problems and Prospects', International Journal for the Scholarship for Teaching and Learning, 5(2). Retrieved from http://academics.georgiasouthern.edu/ijsotl/v5n2/invited_essays/P

DFs/Islam.pdf

[13] Johnson, D.W, Johnson, T. T. 1999, Learning together and alone. Cooperative, Competitive, and Individualistic Learning, MA: Publisher Allyn and Bacon, Boston.

[14] Jonassen, D.H., Peck, K. L., Wilson, B. G. 1999, Learning with Technology: A Cnstructivist Perspective, Prentice Hall Inc, New Jersey.

[15] Jung, I. and Latchem, C. 2011, 'A Model for e-Education: Extended Teaching Space and Extended Learning Spaces', British Journal of Educational Technology, 42 (1) 6-18.

[16] Livingston, K., Condie, R. 2006. 'The impact of an Online Learning Program on Teaching and Learning Strategies', Theory into Practice, 45 (2) 150-158.

[17] Maltby, A., Mackie, S. 2009, 'Virtual Learning Environment- help or hindrance for the 'Disengaged' Student?' ALT-J, 17 (1) 49 – 62.

[18] Maor, D. 2003, 'The teacher's role in developing interaction and reflection in an online learning community,' Educational Media International, 40 (2) 127–137.

[19] Ruey, S. 2010, 'A Case Study of Constructivist Instructional Strategies for Adult Online Learning', British Journal of Educational Technology, 41 (5) 706-720.

[20] Rye, S. A. 2009, 'Negotiating the Symbolic Power of Information and Communication technologies (ICT): The Spread of Internet-supported Distance Education', Information Technology for Development, 15 (1) 17-31.

[21] Sharpe, R. 2009, 'Engagement in Learning and Development', ALT-J, 17 (1) 1-2.

[22] Silverman, B. 1995, 'Computer Supported Collaborative Learning (CSCL)', Computer and Education, 25 (3) 81-91.

[23] Staton, D., Bayon, V., Neale, H., Ghali, A., Benford, S., Cobb, S. et al. 2001, 'Classroom Collaboration in the Design of Tangible Interfaces for Story Telling', Proceedings of the SIGCHI 2001 Conference on Human Factors in Computing Systems, San Francisco, CA, 482-489.

[24] Stein, S.J., Shephard, K. Harries, I. 2009, 'Conceptions of eLearning and Professional Development for eLearning held by Tertiary Educators in New Zealand, British Journal of Educational Technology, 42 (1), 145-165.

[25] Vygotsky, L. S. 1978. Mind in Society: The Development of Higher Psychological Process, Harvard University Press, London.

[26] Wertsch, J. V. 1991, Voice of the Mind: A Sociocultureal Approach Mediated Action, Harvard University Press, Cambridge MA.

[27] Woo, K., Gosper, M., McNeill, M., Greg, P., Green, D, Phillps, R. 2008, 'Web-based Lecture Technologies: Blurring the boundaries between face to face and Distance Learning,' ALT-J, 16 (2) 81-93.

[28] Xie, K, Ke, F. 2010, 'he Role of Students' Motivation in Peer-moderated asynchronous Online Discussions,' British Journal of Educational Technology, doi:10.1111/j.1467-8535.2010.01140.x

[29] Zurita, G. & Nussbaum, M. 2007, 'A Conceptual Framework based on Activity Theory for Mobile CSCL', British Journal of Educational Technology, 38 (2) 211-235.

[30] Islam, K, Vale, C. 2012, 'The teacher's Role in Promoting Online Peer Group Learning', International Journal of Information and Communication Technology Research, 2 (1) 87-96.

[31] Kanuka, H. and Anderson, T. 1998, 'Online Social Interchange, Discord, and Knowledge Construction', Canadian Journal of Distance Education, 3 (1), 57-74.

[32] Curtis, D. D, Lawson, M. J. 2001, 'Exploring Collaborative Online Learning', JALN, 5 (1) 22-34.

[33] Stacy, E. 1999, 'Collaborative Learning in an Online Environment', Journal of Distance Education. Retrieved from http://web.mit.edu/acs/faq/Online-collaboration/collab-learning_files/stacey.htm

Md Kabirul Islam is an Associate Professor of Computer Science and Engineering Department of Daffodil International University, Dhaka. He obtained his PhD in Technology Supported Education from an Australian University. He has several research projects and publications related to the different areas of ICT for Development (ICT4D) such as eEducation, mLearning, eHealth, and eCommerce.

An Improved Approach for Localization of Text Regions from Complex Document Images

Madeena Sultana, Sabrina Sharmin, Farhana Sabrina, Mohammad Shorif Uddin

Abstract—Text regions extraction from document images containing both texts and graphics is an important step of any optical character recognition system. This paper describes an improvement over existing methods for localization of text regions from document images. The improvement is achieved by accommodating distinctive features like regularity in frequency, orientation, width, area, spatial cohesion etc. to identify text blocks in a document image containing both text and graphics. Proposed technique is tested on MARG dataset of multiple layouts and large varieties of color document images collected from web. Experimental result confirms the improvement of extraction accuracy by suppressing the false alarms notably.

Keywords—Discrete wavelet transform (DWT), document image segmentation, Haar wavelet transform (HWT), Run length smoothing algorithm (RLSA), text localization.

1 Introduction

TEXT is usually the main source of information in documents and accurate text detection can greatly facilitate optical character recognition. Automatic recognition, reading, and storing information are the demands of modern technology. Therefore, text localization and extraction is a key area of research in document image analysis.

However, locating and extracting textual data is not an easy task. Since texts are often embedded in different font styles, sizes, orientations and colors against a complex background. Moreover, low contrast between the text and the complicated background often makes text detection extremely challenging. To address these problems, a large number of new methods for text localization, extraction and optical character recognition have been proposed recently. Some of the well known approaches are: (i) morphology based segmentation [1], ii) pixels based classification [2], iii) connected component based classification [3]-[5], iv) edge based segmentation [6], v) texture based segmentation [7], vi) frequency based classification [8]-[10], vii) run length based segmentation [11],[12], and viii) sparse representation based segmentation [13]. The survey papers [14]-[16] enlist more techniques for layout analysis of document images.

In text extraction process, the most important step is to find approximate locations of text lines in a gray-scale image. In this paper we address the problem of locating the textual data in an image. Our proposed system employs both connected component and discrete wavelets to localize text from complex document layouts.

The paper is organized as follows. Section 2 deals with the related work. Section 3 gives a step by step description of proposed method. Experimental results are illustrated in Section 4. Finally, conclusions and future works are summarized in Section 5.

2 Previous work

Many researchers have been investigating various wavelet based techniques to retrieve textual information present in document and scene images. Li and Gray [8] used distribution characteristics of wavelet coefficients for document image segmentation. Liang and Chen [9] employed Haar wavelet transform to detect edges of candidate text regions. Kumar et al. [10] proposed globally matched wavelet filters and Markov random field (MRF) based processing for text extraction from document and scene text images. In 2004, Liang and Chen's proposed a simple approach and it performs well for separating captions and titles from video and scene images. However, it is often unable to differentiate between text and non-text components in document images and hence produces large false alarms especially when the layout is complex. In this paper, we introduce an improvement of Liang and Chen's segmentation algorithm to suppress false alarm and generalize it for separating text and non-text components from document images as well.

3 Proposed Method

We propose an improved and efficient method to extract text regions from document images containing both text

- *Madeena Sultana is with the Department of Computer Science and Engineering, University of Liberal Arts Bangladesh, Dhaka, Bangladesh. E-mail: madeena.sultana@ulab.edu.bd.*
- *Sabrina Sharmin is with the Department of Computer Science and Engineering, State University of Bangladesh, Dhaka Bangladesh. E-mail: monika.329@gmail.com.*
- *Farhana Sabrina is with the Department of Electronics and Telecommunication Engineering. ULAB, Dhaka, Bangladesh. E-mail: farhana.sabrina@gmail.com*
- *Mohammad Shorif Uddin is the Department of Computer Science and Engineering, Jahangirnagar University, Savar, Dhaka, Bangladesh. E-mail: shorifuddin@gmail.com.*

Manuscript received on 28 August 2012 and accepted for publication on 30 September 2012.

© 2012 ULAB JSE

and graphics.

The whole text extraction process is divided into three distinct parts:

a. Candidate region extraction
b. Noise reduction
c. Text localization

Fig. 1 depicts the block diagram of our proposed method. We followed the method of Liang and Chen [9] for candidate region extraction. Then we added a noise reduction step to reduce false alarms and a connected component analysis step for localization of text regions. In our process, we have not considered the small text regions like the page number and vertical text lines.

3.1 Candidate Region Extraction

According to the proposed method by Liang and Chen the candidate region extraction process has three major subsections.

a. Edge detection
b. Thresholding
c. Region detection

However, first of all, if the input image is colour, it is converted to an intensity image I by combining the RGB components of the original image as follows:

$$I = 0.299R + 0.587G + 0.114B \quad (1)$$

3.1.1 Edge Detection

The discrete wavelet transform has many applications in signal analysis and image processing. One important application among those is edge detection. We have used Haar wavelet transform (HWT) as it is simpler and operates fastest among all wavelets. Two-dimensional (2D) HWT decomposes an input image into four sub-bands, one average component (LL) and three detail components (LH, HL, HH). We can obtain the following edge features of the original image from three detail components produced by 2D Haar (DWT).

a. HL sub-band detects vertical edges.
b. LH sub-band detects horizontal edges and
c. HH sub-band detects diagonal edges

For example, in Fig. 2 the gray-level image is decomposed into 2-D Haar DWT. From the three detail component sub-bands (LH, HL, and HH) in Fig. 2 the candidate text edges can be detected.

3.1.2 Thresholding

Thresholding is a simple technique for separating image objects from the background. Since, the intensity of the text edges is higher than that of the non-text edges we can preliminarily remove the non-text edges by selecting an appropriate threshold value for each sub-band. In this subsection, dynamic thresholding [9] technique is applied to calculate the target threshold value T. The target threshold value is determined by performing the following equations on each pixel of each sub-band:

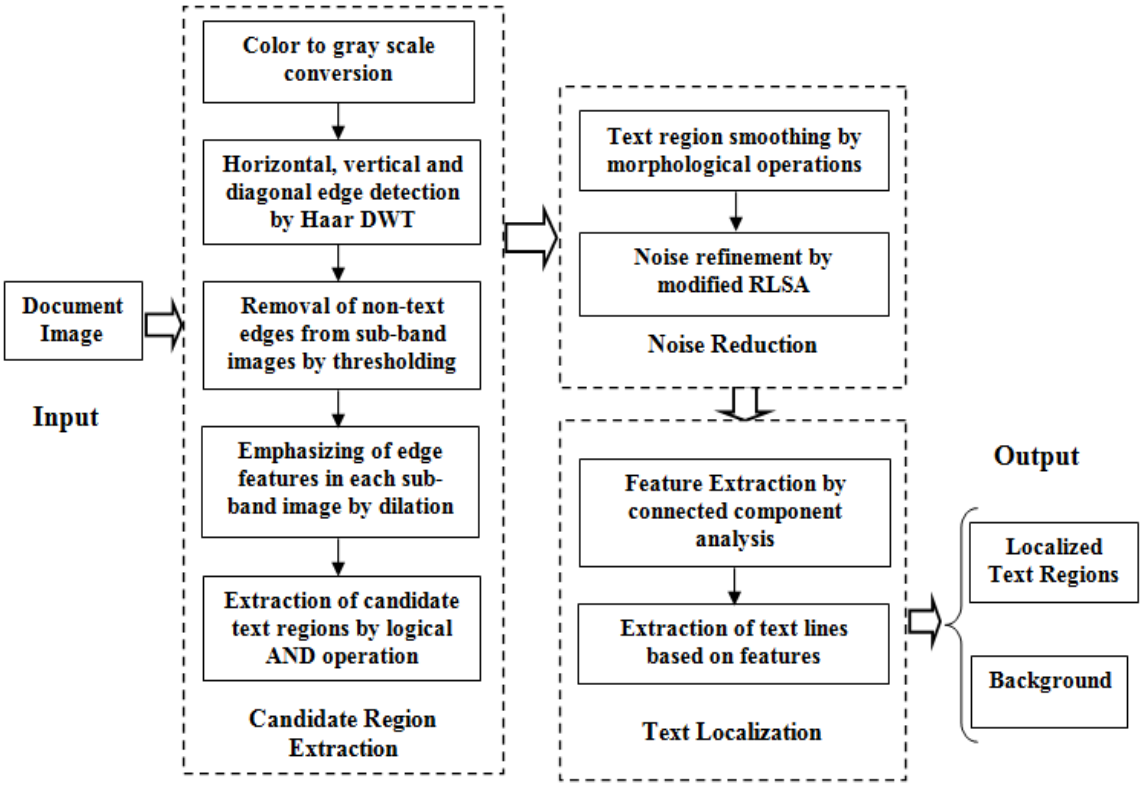

Figure 1: Block diagram of proposed model

$$T = \frac{\sum (subband \quad (i, j) \times e(i, j))}{\sum e(i, j)} \tag{2}$$

Where e(i,j) denotes intermediate sub-image and is calculated by the following equation:

$$e(i, j) = Max(|g1 ** subband(i, j)|, |g2 ** subband(i, j)|) \tag{3}$$

$$g1 = [-1 \quad 0 \quad 1], \; g2 = [-1 \quad 0 \quad 1]^t \tag{4}$$

In (4), g1 and g2 are two mask operators and ** denotes two dimensional linear convolution operation.

$$b(i, j) = \begin{cases} 255, & if \;\; subband \quad (i, j) > T \\ 0, & otherwise \end{cases} \tag{5}$$

Using (2)-(4), the threshold value (T) is determined dynamically for different sub-bands and the binary image (b) is then obtained by comparing T with every pixel value of each detail components.

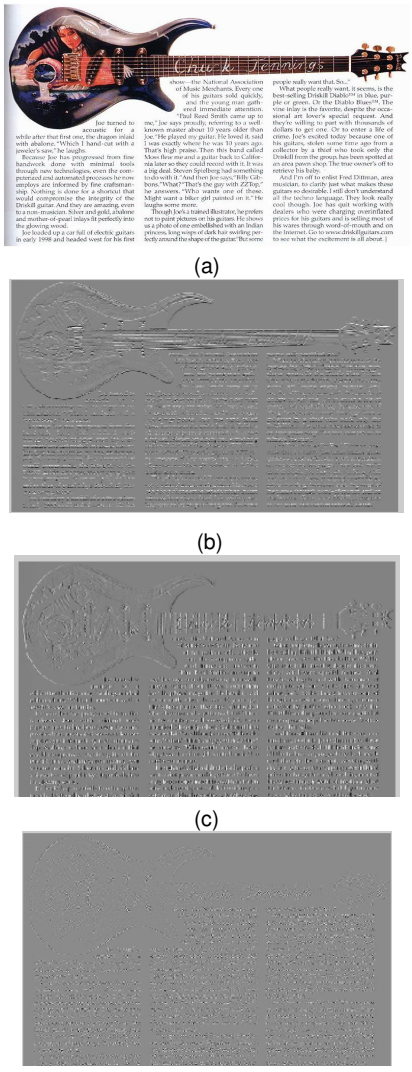

(a) (b) (c) (d)

Figure 2: Haar discrete wavelet transform: a) Original image, b) Horizontal sub-band (LH), c) Vertical sub-band (HL), d) Diagonal sub-band (HH) image.

In Figs. 3(a), 3(b), and 3(c) show horizontal, vertical, and diagonal sub-band images after thresholding, respectively.

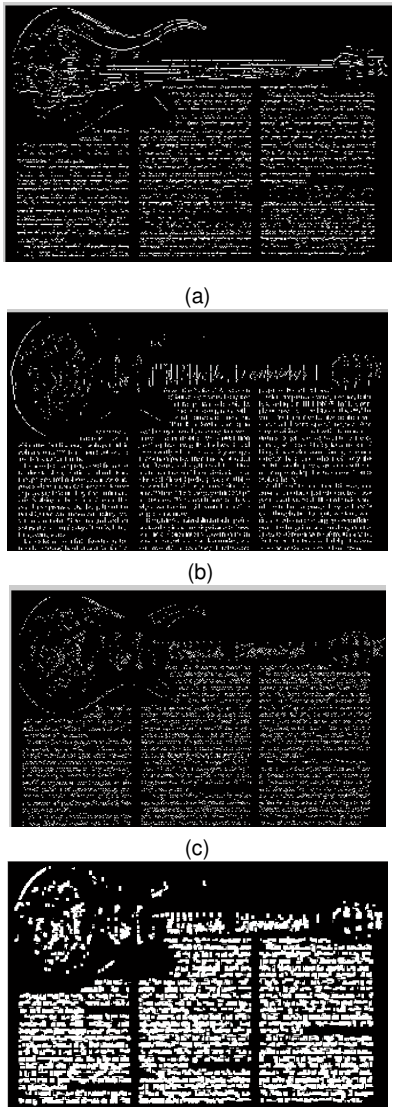

(a) (b) (c) (d)

Figure 3: Binary Images: a)Horizontal threshold image, b)Vertical threshold image, c)Diagonal threshold image, d)after AND operation.

3.1.3 Region Detection

Different morphological operators are used to connect isolated candidate text edges in each binary image of the detail sub-band components. In this paper, we used 5×7 pixels for horizontal operator, 5×5 pixels for diagonal operator and 7×5 pixels for vertical operator. The operators are determined through experimentation of a wide range of document images. Since vertical edges, horizontal edges and diagonal edges are intermixed in text regions we can detect candidate text regions by logical AND operation of the dilated binary images. Fig. 3(d) depicts the image after AND operation.

3.2 Noise Reduction

Noise reduction is accomplished by the following two

steps:

a. Text region smoothing by morphological operation
b. Noise refinement by Run-length Smoothing Algorithm (RLSA)

Before noise refinement the following morphological operations are performed for smoothing the candidate text regions.

$$X_1 = ((X_0 \bullet B_{Square}) \circ B_{Square}) \quad (6)$$
$$X_2 = ((X_1 \bullet B_{Rectangle}) \circ B_{Rectangle}) \quad (7)$$

Where, X_0 is the binary image containing candidate text regions along with false alarm, $\circ$ and $\bullet$ denote morphological opening and closing respectively. These operations produce smooth text lines by removing narrow bridges between adjacent text regions and small spurious non-text regions, and fill in narrow holes in regions. The resulting image shows which blocks in the output image are informative.

At this stage, several closely parallel edges may be falsely detected as text. Therefore, we incorporated horizontal and vertical projection profile analysis with (Run-length Smoothing Algorithm) RSLA to separate the true texts from the candidate ones. In this RLSA approach, candidate text regions are refined based on empirical threshold values, Tx and Ty calculated for the horizontal and vertical projections, respectively. RLSA then eliminates horizontal and vertical white runs whose lengths are smaller than the corresponding threshold value.

$$T_x = \frac{1}{4} \times \text{Mean of (horizontal projection profile)} \quad (8)$$

$$T_y = \frac{1}{3} \times \text{Mean of (Vertical projection profile)} \quad (9)$$

Fig. 4 illustrates the steps of our RLSA.

3.3 Text Localization

At this stage, the non-text components are then removed using various characteristic features of texts. Our text localization process has two major steps:

a. Extraction of features by connected component analysis
b. Localization of text regions based on features

In document images a number of lines typically have approximately same height and width. The small regions with irregular shapes usually belong to the non-text regions. Based on these heuristic rules we processed candidate text regions as text lines. We computed various features such as: average area, width, and height of each connected component and removed regions having too small width and area comparing to the average value. At the end, only those regions in the final image are retained, which have area close to a rectangle and width greater than half of the mean width of all candidate regions. This process prunes the non-text regions mostly and filters out promising candidates. The resultant image of localized texts is shown in Fig. 5.

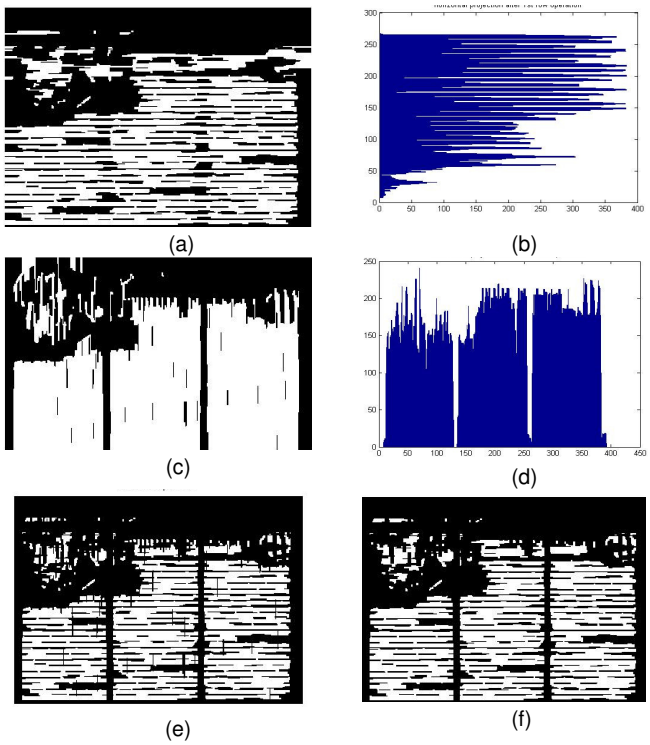

Figure 4: RLSA: a) Row (horizontal) operation, b) Horizontal projection profile, c) Column (vertical) operation, d) Vertical projection profile, e) AND operation, f) Again horizontal, vertical and AND operation.

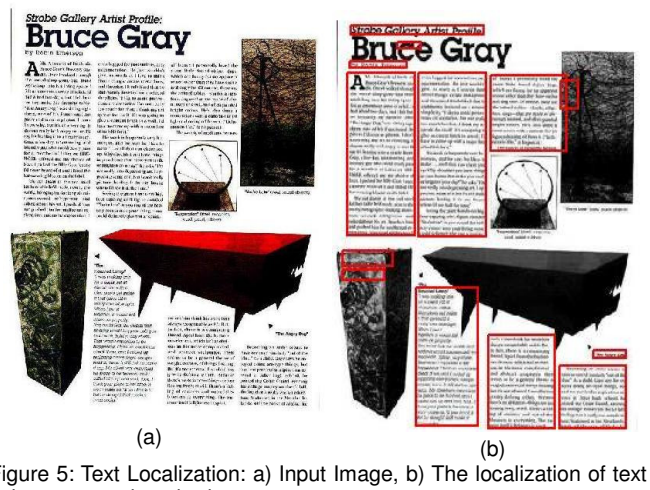

Figure 5: Text Localization: a) Input Image, b) The localization of text using proposed method

4 Experimental Results and Discussions

To evaluate the performance of proposed approach, we have selected 35 downloaded images of books, journals, and magazines from the Internet containing complex backgrounds, graphics, different font sizes, and overlapping styles as the experimental data set. To demonstrate

the efficiency of our method we have also tested proposed method in another database which contains 45 document images from MARG [17] dataset. The latter dataset is created by randomly picking 5 images from each of nine classes of the page layouts of MARG. Our proposed method performed equally well for regular and irregular layouts along with complex background. Fig. 6 compares the resultant images by proposed method and Liang and Chen's method. In Fig.6 it is visually evident that resultant image obtained by our method can locate text region more accurately and contains less false alarms than Liang and Chen's method. Fig. 7 represents some results of applying our method on MARG dataset.

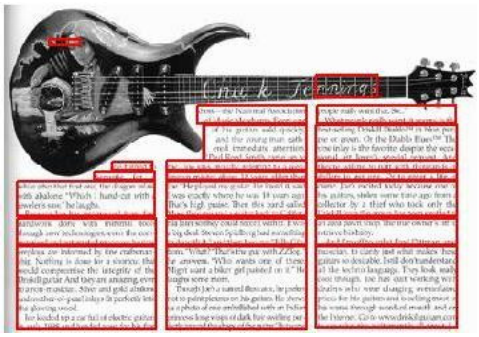

(a)

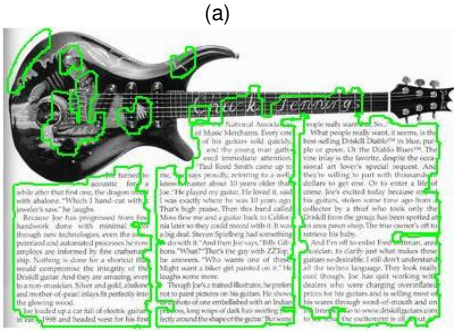

(b)

Figure 6: Text localization of a downloaded image by: a) proposed method, b) Liang and Chen's method

For quantification of accuracy of localization, rate of accuracy is calculated to evaluate the performance. Rate of accuracy of text localization is defined as follows:

$$Accuracy\ Rate = \frac{Total\ \ localized\ \ text\ \ regions}{Total\ \ text\ \ regions} \times 100 \quad (10)$$

Table 1 shows the accuracy rate and false alarms obtained by proposed method and Liang and Chen's method [9], respectively for downloaded images. Images containing total 99 text regions we obtained an accuracy of 96% by the proposed method.

Texts with very large font size are treated as graphics by proposed method and, therefore, can not be localized or partially localized. However, from Table 1 and resultant images it can be concluded that proposed method has better performance in terms of both accuracy rate and suppressing false alarms for localization of texts in document images.

TABLE 1
PERFORMANCE COMPARISON OF TEXT REGION LOCALIZATION

	Proposed method	Liang and Chen's method
Total text regions	99	99
Total extracted text regions	95	81
False alarms	191	714
Accuracy rate	96%	82%

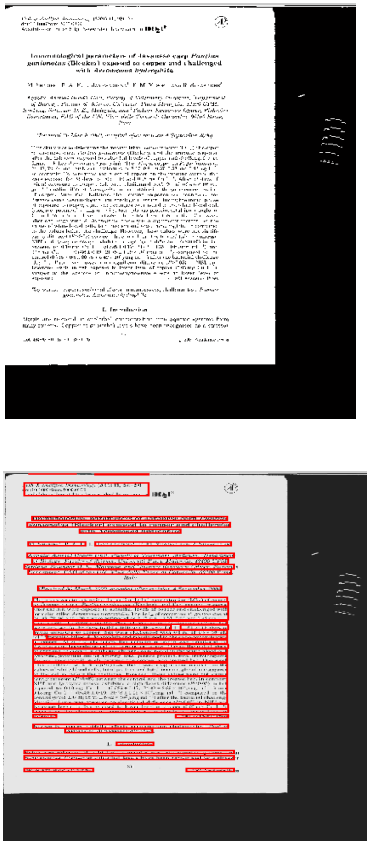

Figure 7: Text localization by proposed method: Sample output document images from MARG dataset.

5 CONCLUSIONS

Text extraction from document images is a challenging task because of the complex background and multi-resolution criteria. Moreover, degradations introduce during scanning or copying a paper document. This paper presents an efficient and simple method to locate texts in documents. To improve the accuracy we modified Liang and Chen's approach by accumulating RLSA with connected component analysis. Our experimental results show that, along with improving accuracy, our method reduces false alarms from resultant images. Moreover,

compared with other methods our technique relied on adaptability of predefined text region features. However, successful detection with our method dropped down significantly under cases when textual regions are vertical or scattered and intertwined heavily with irregular graphical blocks and backgrounds. Future work, involves dealing with this problem for more accurate detection mechanism.

REFERENCES

[1] Hasan, M. Y. and Lina J, Y. K," Morphological text extraction from image," *IEEE Transactions on Image Processing*, vol. 9, no.11, pp.1978 - 1983.

[2] Moll, M. A., Baird, H. S., and An, C., "Truthing for pixel-accurate segmentation," *Document Analysis Systems, the Eighth IAPR Int. Workshop*, pp. 379-385, Sep. 2008.

[3] L. A. Fletcher and R. Kasturi,"A robust algorithm for text string separation from mixed text/graphics images," *IEEE Transactions on PAMI*, vol. 10, no. 6, pp. 910-918, 1988.

[4] Julinda Gllavata, Ralph Ewerth and Bernd Freisleben, "A Robust algorithm for Text detection in images," *Proc. of the 3rd International Symposium on Image and Signal Processing and Analysis*, 2003.

[5] Bukhari, S. S., Shafait, F., and Breuel, T. M., "Document image segmentation using discriminative learning over connected components," *Proc. 9th IAPR Workshop on Document Analysis Systems*, pp. 183-190, 2010.

[6] M. Ly u, J. Song, M. Cai, "A comprehensive method for multilingual video text detection, localization, and extraction," *IEEE Transactions on Circuits and Systems for Video Technology*, vol. 15, no. 2, pp. 243 –255, 2005.

[7] A.K. Jain, Y. Zhong, "Page segmentation using texture analysis, "*Pattern Recognition*," vol. 29, no. 5, pp.743–770, 1996.

[8] J. Li and R. M. Gray, "Context based multi-scale classification of document images using wavelet coefficient distribution, " IEEE Trans. Image Process., vol. 9, no. 9, pp. 1604 –1616, Sep. 2000.

[9] Chung-Wei Liang and Po-Yueh Chen, "DWT based text localization," *International Journal of Applied Science and Engineering*, vol. 2, no. 1, pp.105-116, 2004.

[10] Sunil Kumar, Rajat Gupta, Nitin Khanna, Santanu Chaudhury, and Shiv Dutt Joshi, "Text extraction and document image segmentation using matched wavelets and MRF model", *IEEE Transactions on Image Processing*, vol. 16, no. 8, pp. 2117-2128, Aug. 2007.

[11] O. Okun, D. Doermann, and M. Pietikainen, "Page segmentation and zone classification: the state of art," Technical Report LAM-TR-036, CAR-TR-927, CS-TR-4079, University of Maryland, College Park, Nov. 1999.

[12] Hung-Ming Sun, "Enhanced constrained run-length algorithm for complex layout document processing," *International Journal of Applied Science and Engineering*, vol.3, pp.297-309, April. 2006.

[13] Ming Zhao, Shutao Li, James Kwok, "Text detection in images using sparse representation with discriminative dictionaries", *Image and Vision Computing*, vol.28, pp.1590–1599, 2010.

[14] Y.Y. Tang, S.W. Lee, C.Y. Suen, "Automatic document processing: a survey," *Pattern Recognition*, vol. 29, no. 12, pp. 1931–1952, 1996.

[15] Nawei C hen, Dorothea Blostein, "A survey o f document image classification: problem statement, classifier architecture and performance evaluation," *International Journal on Document Analysis and Recognition (IJDAR)*, vol.10, pp.1–16, 2007.

[16] K. Tombre, S. Tabbone, L. Pélissier, B. Lamiroy, and P. Dosch, "Text/graphics separation revisited", *Proc. Document Analysis Systems*, pp.200-211, 2002.

[17] MARG document image dataset. Retrieved on 1 June 2011.
http://marg.nlm.nih.gov/gtintro.asp

Madeena Sultana received her M.S. and B.Sc. in Computer Science and Engineering from Jahangirnagar University, Savar, Dhaka, in 2011 and 2008, respectively. In October 2010, she joined the Dept. of Computer Science and Engineering (CSE) at the University of Liberal Arts Bangladesh. She was a Lecturer at the Dept. CSE of Northern University Bangladesh from June, 2008 to July, 2009. She has published more than 10 papers in peer-reviewed journals and conference proceedings. Her research interests include Digital Image Processing, Computer Vision, and GPU Computing. She is a member of the International Association of Computer Science and Information Technology (IACSIT).

Sabrina Sharmin received her B.Sc degree in Computer Science and Engineering from Jahangirnagar University, Savar, Dhaka in 2009. She is now pursuing her MS at the same university. She has been doing her research in the field of Digital Image Processing with special concentration on physical layout analysis of document images.

Farhana Sabrina received her B.Sc (Engg.) in Electrical and Electronic Engineering from Chittagong University of Engineering & Technology (CUET), Chittagong in 2008. She joined in the department of Electronics & Telecommunication Engineering at University of Liberal Arts Bangladesh (ULAB) in 2010 and continuing the job. Previously she worked in Warid Telecom Bangladesh Limited (presently known as Airtel Bangladesh) and Premier University, Chittagong. She is a member of IEEE and IEB.

Mohammad Shorif Uddin received his PhD in Information Science from Kyoto Institute of Technology, Japan, Masters of Education in Technology Education from Shiga University, Japan and Bachelor of Science in Electrical and Electronic Engineering from Bangladesh University of Engineering and Technology (BUET). He joined the Department of Computer Science and Engineering, Jahangirnagar University, Dhaka in 1992 and currently serves as a Professor of this department. In addition, he is serving as an Adviser of School of Science and Engineering, ULAB. He began his teaching career in 1991 as a Lecturer of the Department of Electrical and Electronic Engineering, Chittagong University of Engineering and Technology (CUET). He undertook postdoctoral research at Bioinformatics Institute, A-STAR, Singapore, Toyota Technological Institute, Japan and Kyoto Institute of Technology, Japan. His research is motivated by applications in the fields of computer vision, pattern recognition, blind navigation, bio-imaging, medical diagnosis and disaster prevention. He has published a remarkable number of papers in peer-reviewed international journals and conference proceedings. He holds two patents for his scientific inventions. He received the Best Presenter Award from the International Conference on Computer Vision and Graphics (ICCVG 2004), Warsaw, Poland. He is the co-author of two books. He is also a member of IEEE, SPIE, IEB and a senior member of IACSIT.

GLFSR-Based Test Processor Employing Mixed-Mode Approach in IC Testing

Mohammod Akbar Kabir, Md. Nasim Adnan, Lutful Karim

Abstract—Integrated circuits (ICs) are the key components of all electronic equipment. Design density and complexity of the problem relating to testing ICs have become a challenge with reliable performance and low cost. Stored pattern Built-in self-test (BIST) environment suffers from high hardware overhead due to the requirement of memory devices to store previously generated test patterns. In pseudorandom BIST, environment test patterns are generated by pseudorandom pattern generators such as linear feedback shift registers (LFSRs) which requires very little hardware overhead. LFSR requires long test sequence resulting long time in IC testing for achieving high fault coverage. In this paper, we proposed a design and investigate the performance of Generalized Linear Feedback Shift Register (GLFSR) based test processor implementing mixed-mode testing technique. It shows that GLFSR based Test processor with mixed-mode technique will enhance the performance of IC testing.

Keywords — Automatic Test Equipment (ATE), Built-in Self-Test (BIST), Circuit-Under-Test (CUT), Generalized Linear Feedback Shift Register (GLFSR), Pseudo-Random Vector (PRV).

1 INTRODUCTION

WITHthe dramatic improvement and refinement of integration technology, the design densities and associated complexities of Integrated Circuit (IC) are rapidly increasing. Continued scaling feature sizes have made the integration of several cores in a single monolithic integrated circuit possible, called system on a chip (SOC). As the number of cores integrated in a SOC increased rapidly, both the test data storage requirements on the tester and the test bandwidth requirements between the tester and the chip have grown dramatically [1]. It is expected that this growth will continue in full force in the coming years [2]. In IC manufacturing various physical defects may occur during numerous production stages. Due to the complexities in today's IC, the problems of IC testing have become much more complex. Conventional computer controlled Automatic Test Equipment (ATE) based IC testing suffers from the number of serious drawbacks such as high equipment cost, slow test speed, huge memory space to store and to process test data, and yield loss due to inaccuracy [3-4]. Built-in self-test (BIST) is an efficient testing procedure in which test patterns are generated and applied to the circuit-under-test (CUT) by on-chip hardware. Stored pattern BIST suffers from high hardware cost due to memory requirement to store pre-computed test patterns. Pseudo-random BIST, where test patterns are generated by pseudo-random pattern generators such as linear feedback shift registers (LFSRs) and cellular automata (CA), requires very little hardware overhead. However, achieving high fault coverage for CUTs that contain many random pattern resistant faults (RPRFs) only with (pseudo) random patterns generated by an LFSR or CA often requires unacceptably long test sequences thereby resulting in prohibitively long test time. Linear Feedback Shift Register (LFSR) based test processor ASIC design for low cost IC testing employing weighted random approach have been reported [5-10]. In this approach, generated patterns are biased to improve the fault coverage. Test processor ASIC design employing mixed-mode technique has been proposed where Easy-to-detect (ETD) faults are detected using LFSR generated test patterns and the rest of the Hard-to-detect (HTD) faults are detected using deterministic test patterns and thereby achieved high fault coverage [11-16]. Mixed-mode testing approach is compatible with scan design and offers reduced storage requirements, shorter test application time and simple structure of hardware. It is shown that GLFSR produces quality pseudo-random vector (PRV) which in turn result acceptable fault coverage using lower number of test vectors [17]. GLFSR is outperforms the LFSR. In this paper we have proposed GLFSR based test processor employing mixed-mode technique in IC testing. The next part of this paper is organized as follows. Section 2 starts with the concept of LFSR, GLFSR and mixed mode testing, section 3 presents proposed IC testing approach, sections 4 explores test result and finally the paper ends with conclusion in section.

- *Mohammod Akbar Kabir works with the Department of Economics, University of Dhaka, Bangladesh. E-mail: akbar_kabir03@yahoo.com.*
- *Md. Nasim Adnan works with the Department of Computer Science and Engineering, University of Liberal Arts Bangladesh (ULAB), Dhaka. E-mail: nasim_1547@yahoo.co.uk.*
- *Lutful Karim is a Ph.D. student at the University of Guelph, Canada. E-mail: sumon_lk@yahoo.com.*

Manuscript received on 28 June 2012 and accepted for publication on 24 August 2012.

2 OVERVIEW

2.1 Linear Feedback Shift Register (LFSR)

Linear feedback shift register (LFSR) is usually used to generate pseudo-random test vectors. An LFSR is a series configuration of D flip-flops and exclusive-OR (XOR)

© 2012 ULAB JSE

gates. The XOR gates and shift register act to produce a Pseudo Random Binary Sequence (PRBS) at each of the flip-flop outputs.

Its operation is based on principle of polynomial arithmetic in cyclic coding theory. The general structure of n-bit LFSR is shown in Figure 1. $a_{n-1}, a_{n-2}, \ldots\ldots a_0$ are the outputs of n flip-flop of the n bit shift register and a_n is input to the shift register, equal to the exclusive-OR of the feedback signals; that is:

$$a_n = \sum a_i c_i = a_n c_n \oplus a_1 c_1 \oplus \ldots \oplus a_{n-1} c_{n-1}$$

Here the coefficient $c_i=1$ if the flip-flop output a_i is fed back to LFSR input and $c_i=0$ if a_i is not connected to the feedback circuit.An n-bit LFSR has at most 2^n states but all zero-state is prevented because the LFSR would never leave this state. Hence an n-bit LFSR can have 2^n-1 values. By correctly choosing the points at which we take the feedback from an n -bit shift register we can produce a repeatable PRV sequence of length 2n – 1, a maximal-length sequence that includes all possible patterns (or vectors) of n bits, excluding the all-zeros pattern.

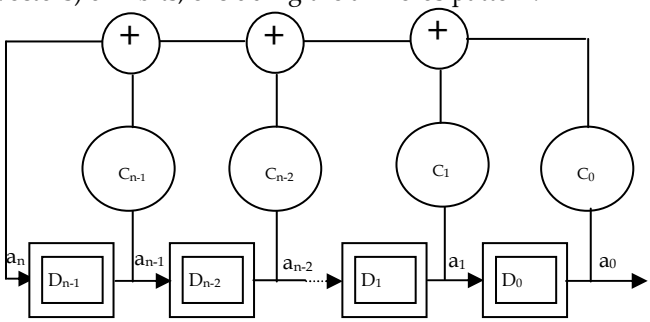

Figure 1: The general structure of LFSR.

2.2 Generalized Linear Feedback Shift Register (GLFSR)

GLFSR are generalized LFSRs that are defined over Galois field $GF(2^{\delta})$, $\delta \geq 1$. It has been shown that GLFSR is significantly more effective as a test pattern generator, providing better fault coverage than the standard LFSR. The general structure of the GLFSR (δ, m) is illustrated in Figure 2. The circuit under test (CUT) is assumed to have $n = (\delta \times m)$ inputs driven by the outputs of the GLFSR. A GLFSR (δ, m) have m stages $D_0, D_1, \cdots, D_{m-1}$, where each stage has δ storage cells of shift registers. Each shift shifts δ bits from one stage to the next stages.

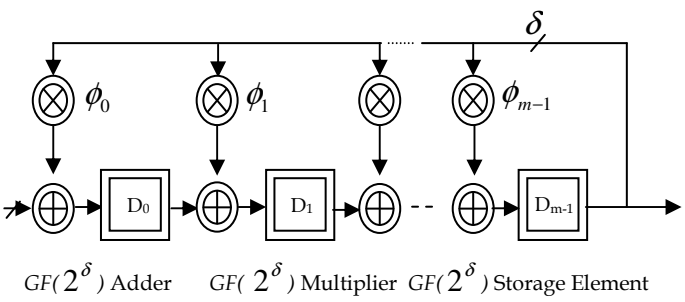

Figure 2: The general structure of GLFSR.

The feedback polynomial of a GLFSR with m stage can be represented as

$$\phi(x) = \phi_0 + \phi_1 x + \phi_2 x^2 + \ldots + \phi_{n-1} x^{m-1} + x^m$$

The coefficients of the polynomial $\phi(x)$ are elements over $GF(2^{\delta})$ and define the feedback connections. The ith coefficient, ϕ_i multiplies the feedback input over $GF(2^{\delta})$, which can be realized using only XOR gates. The GLFSR has different structure depending on the "m" and "δ" value. To generate patterns for a circuit of n inputs, a variety of GLFSR (δ, m) is available, where $(m \times \delta) \geq n$. Different values of δ and m create different types of GLFSRs, capable of generating different types of patterns for the same n-input circuit. As the value of δ increases, the number of XOR gates needed to realize the generator increases. It has been shown that GLFSR is significantly more effective as a test pattern generator [16], providing better fault coverage than the standard LFSR. In the proposed IC testing approach Generalized Linear Feedback Shift Register (GLFSR) in place of LFSR has been used as pattern generator.

2.3 Mixed-mode Testing

Mixed-mode pattern generation includes generation of pseudo-random vectors first and then generation of deterministic test vectors. This approach exploits advantages of both the pseudo-random test technique and deterministic test technique. A generalized scheme of mixed-mode technique is shown in Figure 3. PRV generated form LFSR or other generators can cover a large percentage of easily testable faults. The remaining random pattern resistant faults are Hard-To-Detect (HTD), deterministic test vectors are then generated using same generator and tested. Thereby complete faults coverage can be achieved by this mixed-mode approach. This approach also offers reduced storage requirements, shorter test application time, and smaller area overhead compared to weighted random approach.

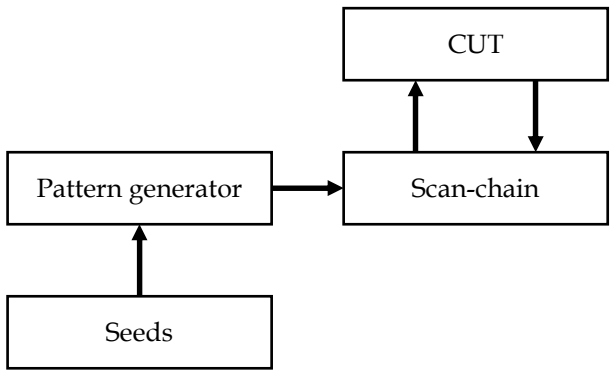

Figure 3: Generalized scheme of mixed-mode technique.

3 Proposed IC Testing Approach

In this section a complete design of GLFSR based IC test processor implementing mixed-mode testing approach has been presented. This proposed design describe a highly randomized, low hardware overhead test pattern generator (TPG) for scan-based built-in self-test (BIST) and also achieve very high fault coverage. GLFSR generated PRV is applied to a CUT to detect all the ETD faults

and then deterministic test sets are generated using the same GLFSR to target the remaining HTD faults using compacted test data called seed. Therefore complete fault coverage can be achieved.

3.1 Test Processor Architecture

The functional block diagram of the IC test processor implementing GLFSR based mixed-mode technique is shown in Figure 4. It consists of micro-UART, control unit, GLFSR, Signature Analyzer (SA), Buffer Register (BR), Information Register (IR), and Random Access Memories (RAMs). Prior to start testing of a CUT, necessary test information is loaded from PC through micro-UART. The information register (IR), test length storage RAM (TL_R), seed storage RAM for random test pattern generation (SD_R), seed storage RAM for deterministic test pattern generation (SDD_R) and signature storage RAM (SG_R) are used to store the test data. Once data loading is completed, testing process is 'ON'. During testing process, test vectors are generated from the GLFSR and are loaded into the BR and are applied to the CUT. Output response of the CUT is captured into the BR and sent to the SA. At end of the test set, the generated signature is compared with that of a fault-free circuit of the same type (reference CUT). If the two signatures are the same, then the CUT is determined as fault-free, otherwise as faulty.

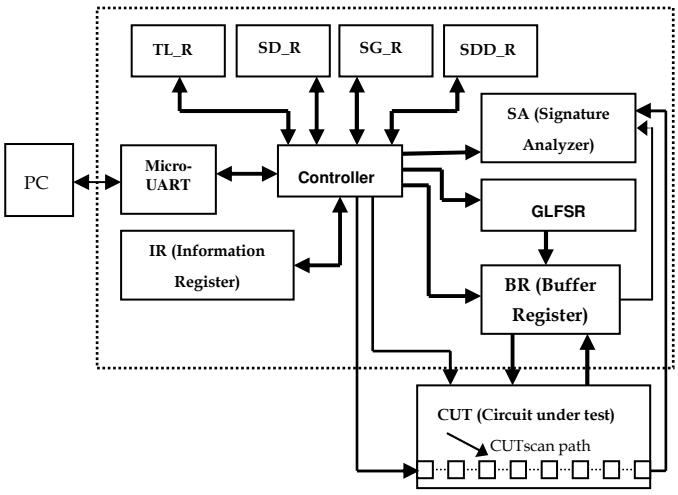

Figure 4: Functional block diagram of the proposed test processor.

3.2 Testing Procedure

The operation of the IC tester has three phases: (a) load data in the IR and the RAMs (b) circuit test and (c) retrieval of test result. Prior to start testing of a CUT the IR, TL_R, SD_R and SDD_R are loaded with appropriate information from PC through micro-UART. In the mixed-mode testing, pseudo-random testing approach is followed by deterministic testing approach. To start pseudo-random testing of the CUT, the controller reset the GLFSR, the BR, and the SA to zero and reads the test length, the seed and the signature from the TL_R, SD_R, and SG_R respectively. The GLFSR is initialized with the seed and generates PRV. The PRV is loaded into the BR and scan path (SP) and then applied to the CUT. The output response vectors of the CUT are captured into the BR and that of secondary output of the CUT into the SP. When the test vectors of the second test cube are loaded into BR and SP, output responses of the CUT due to the first test cube are shifted into the SA. The controller of the tester counts the number of test cubes of PRV applied to the CUT. The testing process continues until the test count equal to the predefined test length for the pseudo-random test. Once the pseudo-random test is completed, the deterministic test starts. The controller reads the seed from the SDD_R and generates deterministic test cube by decoding the seed using the GLFSR. The test cube is applied to the CUT and the output response vectors are captured into the BR and sent to the SA in the same fashion as that of the pseudo-random testing. The controller counts the number of deterministic test cubes applied to the CUT. When the number of the test cubes equals to the predefined number of deterministic test length then the generated signature is compared with that of the reference signature and the status of the CUT is determined as fault-free if the two signatures are the same otherwise as faulty. The procedure of testing is illustrated below:

1. *Load IR with necessary information about the CUT and Number of test sets.*
2. *Read data for test length signature and seed*
3. *Generate test vector and apply to CUT*
4. *Capture output response of CUT and send to SA*
5. *If the number of test vector is no equal to number of predefined test length then go to step 3.*
6. *Compare signature and determine whether the IC is fault free on not.*
7. ***If** the number of test set is not equal to presetted number of test set the go to step 3 else end of test*

4 Fault Simulation Results

Fault simulation experiments have been conducted using FSIM digital fault simulator on ISCAS85 benchmark circuits. Summary of the fault simulation results using GLFSR based mixed-mode approach is shown in Table 1.

TABLE 1
SUMMARY OF THE FAULT SIMULATION RESULT OF ISCAS85 BENCH-MARK CIRCUIT USING GLFSR BASED MIXED MODE APPROACH

Benchmark Circuit	No of Faults	Patterns required	Fault Coverage
c432	524	214	100%
c499	758	225	100%
c880	942	248	100%
c1355	1574	314	100%
c1908	1879	969	100%
c2670	2747	724	100%
c3540	3428	271	100%
c5315	5350	388	100%
c6288	7744	234	100%

The table shows that the total number of test vector including deterministic required achieving complete fault coverage for ISCAS benchmark circuit. It shows that 100% fault coverage can be achieved using mixed-mode approach. The result presented in Table 1 can be compared with that of other researchers [7, 8, 9, 11 and 14]. Comparison of the fault simulation result is presented in Table 2.

TABLE 2
COMPARISONS OF FAULT SIMULATION RESULTS OF THE ISCAS85 BENCHMARK CIRCUITS WITH THAT OF OTHER RESEARCHERS

Benchmark Circuit	*TV1	*TV2	*TV3	*TV4	*TV5	*TV6	*TV7
C432	214	232	352	320	512	1024	320
C499	225	518	-	-	-	-	-
C880	248	179	4544	416	260	1280	160
C1355	314	526	1248	1664	2244	2098	2784
C1908	969	996	4608	2496	2308	5376	3916
C2607	724	360		6240	10766	5888	6400
C3540	271	748	1065	9504	12220	3840	4352
C5315	388	662	1632	1950	1316	2048	1024
C6288	234	69	-	-	-	-	-

*TV1: Number of test vectors required in the present work

*TV2: Number of test vectors using DRM mixed-mode technique obtained by Liakot (2004)

*TV3: Number of test vectors using MP-LFSR based mixed-mode technique obtained by Liakot (1998)

*TV4: Number of test vectors using weighted random technique obtained by Iftekhar (1995)

*TV5: Number of test vectors using weighted random technique obtained by Wunderlich (1990)

*TV6: Number of test vectors using weighted random technique obtained by Waicukauski et al. (1989)

*TV7: Number of test vectors using weighted random technique obtained by Lisanke et al. (1990).

The sign '-' in Table 2 indicates the unavailability of the actual data. It shows that the proposed GLFSR based mixed-mode approach is capable conducting IC testing with 100% fault coverage using much lower number of test vectors that that of other researchers.

5 CONCLUSION

A novel pattern generator GLFSR based test processor has been presented in this paper. In this testing mixed-mode approach has been implemented for IC testing. The detail design of the test processor and testing procedure are discussed. The proposed approach can test IC effectively with reasonable fault coverage and have the potential to detect faults effectively. The test patterns generated by the proposed method are applied to the ISCAS bench mark circuits. The fault simulation results show that the proposed approach requires much fewer patterns than other approaches. This can be significance for the faults detection of very large circuits with a large number of inputs.

REFERENCES

[1]. D. K. Pradhan, S. K. Gupta, "A new framework for designing & analyzing BIST techniques and zero aliasing compression", *IEEE Transactions on Computers*, 40, pp.743-763, 1991.

[2]. R. Rajsuman, *System-on-a-chip: Design and Test*, Artech House, Boston, 2000.

[3]. L. Ali, R.Sidek, I. Aris, M. A. Mohd. Ali, and B. S.Suparjo, *Challenges and Directions for IC testing, Integration,*The VLSI Journal, pp. 17-28, Vol 37(1), Elsevier Science, Netherland,2004.

[4]. Nadeau_Dostie, "Design for At-speed Test, Diagnosis and Measurement", K. A. Publisher, Boston USA, 2000.

[5]. R. W. Bassett, B. J. Butkus, Dingle et al.,"Low cost testing of high density logic components", *Proceedings of International Test Conference*, pp. 550-557, 1989.

[6]. N. Jarwala, and C. W. Yau, "Achieving board-level BIST using the boundary-scan master",*IEEE Proceedings of International Test Conference* pp. 649-658, 1991.

[7]. A. P.Strole, and H. J. Wunderlich, *TESTCHIP: A chip for weighted random pattern generation, evaluation and test control,* IEEE Journal of Solid-State Circuits, pp. 1056-1063, 1991.

[8]. I. Ahmed, VLSI circuits testing using probabilistic approach, Ph.D. Diss., UniversitiKebangsaan Malaysia,1995

[9]. J. A. Waicukauski, E. Lindbloom, E. B. Eicheblberger and O. P. Forlenza, *A method for generating weighted random test patterns*, IBM Journal of research and development Vol. 33(2):149-161, 1989.

[10]. J. A.Waicukauski, and E. Lindbloom, "Fault detection effectiveness of weighted random patterns,"*Proceedings of International Test Conference, pp. 245-255*, 1988.

[11]. L. Ali, Development of a functional digital integrated circuit testing system using mixed-mode technique. Ph.D. Thesis, Universiti Putra Malaysia, 2004.

[12]. L. Ali, R. Sidek, I. Aris, R.Wagiran, M. A. Ali, and B. S. Suparjo, "Development of FPGA-based functional IC Testing System", *ROVISP'2005*, Penang, Malaysia,2005.

[13]. C. V. Krishna, A. Jas, and N. A. Touba, "Test vector encoding using partial LFSR reseeding,"*In Proceedings of International Test Conference*, pp. 885-893, 2001.

[14]. L. Ali, Design of a processor chip using multiple polynomial, multiple seed linear feedback shift register. M.Sc. Thesis, UniversitiKebangsaan Malaysia, 1998

[15]. S. Hellebrand, S. Tarnick, J. Rajski, and B. Courtois, "Generation of vector patterns trough reseeding of multiple–polynomial linear feedback shift registers," *IEEE Proceedings Of International Test Conference*, pp. 120-129, 1992.

[16]. S. Hellebrand, S. Tarnick, S. Venkataraman, and B. Courtois, "Built-in test for circuits with scan based on reseeding of multiple–polynomial linear feedback shift registers,"*IEEE Trans. on Comp. Vol.* 44(2), pp. 223-233, 1995.

[17]. D. K. Pradhan, M. Chaterjee, "GLFSR- a new test pattern generator for built-in-self-test'"*IEEE transactions on Computer-Aided Design of Integrated Circuits and Systems, Volume* 18(2), pp. 238-247, 1999.

Mohammod Akbar Kabir received his M.Sc. and B.Sc.(Hons.) in Computer Science from the University of Dhaka in 2000 and 1998, respectively. Currently he is working as an Assistant Professor at the Dept. of Economics, University of Dhaka. He also served as an Assistant Programmer at the Dept. of ITOCD, Bangladesh Bank and as a Lecturer, Dept. of Computer Science, Dhaka City College. His research interests are in the area of VLSI Design and E-Commerce.

Md. Nasim Adnan received M.Sc. in CSE from Bangladesh University of Engineering and Technology (BUET) and B.Sc. in CSE from Khulna University. Currently he is working as an Assistant Professor in the Dept. of Computer Science and Engineering, University of Liberal Arts Bangladesh (ULAB). He also served as a Deputy Director in the Dept. of ITOCD, Bangladesh Bank. His research interest includes Data Mining, Database Systems, Software Engineering, Software and Systems Testing, and E-Commerce.

Lutful Karim has been working as a faculty member of Computer Science in Islamic University of Technology (IUT) since 2000. Now, he is a Ph.D. student at the University of Guelph in Canada. He has authored several refereed conference and journal publications, and been a member of organization committee and technical program committee in several international conferences. His research interest includes Wireless Communications, Wireless Sensor Network, Fault Tolerance and E-Commerce.

GLFSR-Based Test Processor Employing Mixed-Mode Approach in IC Testing

Mohammod Akbar Kabir, Md. Nasim Adnan, Lutful Karim

Abstract—Integrated circuits (ICs) are the key components of all electronic equipment. Design density and complexity of the problem relating to testing ICs have become a challenge with reliable performance and low cost. Stored pattern Built-in self-test (BIST) environment suffers from high hardware overhead due to the requirement of memory devices to store previously generated test patterns. In pseudorandom BIST, environment test patterns are generated by pseudorandom pattern generators such as linear feedback shift registers (LFSRs) which requires very little hardware overhead. LFSR requires long test sequence resulting long time in IC testing for achieving high fault coverage. In this paper, we proposed a design and investigate the performance of Generalized Linear Feedback Shift Register (GLFSR) based test processor implementing mixed-mode testing technique. It shows that GLFSR based Test processor with mixed-mode technique will enhance the performance of IC testing.

Keywords — Automatic Test Equipment (ATE), Built-in Self-Test (BIST), Circuit-Under-Test (CUT), Generalized Linear Feedback Shift Register (GLFSR), Pseudo-Random Vector (PRV).

1 INTRODUCTION

WITHthe dramatic improvement and refinement of integration technology, the design densities and associated complexities of Integrated Circuit (IC) are rapidly increasing. Continued scaling feature sizes have made the integration of several cores in a single monolithic integrated circuit possible, called system on a chip (SOC). As the number of cores integrated in a SOC increased rapidly, both the test data storage requirements on the tester and the test bandwidth requirements between the tester and the chip have grown dramatically [1]. It is expected that this growth will continue in full force in the coming years [2]. In IC manufacturing various physical defects may occur during numerous production stages. Due to the complexities in today's IC, the problems of IC testing have become much more complex. Conventional computer controlled Automatic Test Equipment (ATE) based IC testing suffers from the number of serious drawbacks such as high equipment cost, slow test speed, huge memory space to store and to process test data, and yield loss due to inaccuracy [3-4]. Built-in self-test (BIST) is an efficient testing procedure in which test patterns are generated and applied to the circuit-under-test (CUT) by on-chip hardware. Stored pattern BIST suffers from high hardware cost due to memory requirement to store pre-computed test patterns. Pseudo-random BIST, where test patterns are generated by pseudo-random pattern generators such as linear feedback shift registers (LFSRs) and cellular automata (CA), requires very little hardware overhead. However, achieving high fault coverage for CUTs that contain many random pattern resistant faults (RPRFs) only with (pseudo) random patterns generated by an LFSR or CA often requires unacceptably long test sequences thereby resulting in prohibitively long test time. Linear Feedback Shift Register (LFSR) based test processor ASIC design for low cost IC testing employing weighted random approach have been reported [5-10]. In this approach, generated patterns are biased to improve the fault coverage. Test processor ASIC design employing mixed-mode technique has been proposed where Easy-to-detect (ETD) faults are detected using LFSR generated test patterns and the rest of the Hard-to-detect (HTD) faults are detected using deterministic test patterns and thereby achieved high fault coverage [11-16]. Mixed-mode testing approach is compatible with scan design and offers reduced storage requirements, shorter test application time and simple structure of hardware. It is shown that GLFSR produces quality pseudo-random vector (PRV) which in turn result acceptable fault coverage using lower number of test vectors [17]. GLFSR is outperforms the LFSR. In this paper we have proposed GLFSR based test processor employing mixed-mode technique in IC testing. The next part of this paper is organized as follows. Section 2 starts with the concept of LFSR, GLFSR and mixed mode testing, section 3 presents proposed IC testing approach, sections 4 explores test result and finally the paper ends with conclusion in section.

- *Mohammod Akbar Kabir works with the Department of Economics, University of Dhaka, Bangladesh. E-mail: akbar_kabir03@yahoo.com.*
- *Md. Nasim Adnan works with the Department of Computer Science and Engineering, University of Liberal Arts Bangladesh (ULAB), Dhaka. E-mail: nasim_1547@yahoo.co.uk.*
- *Lutful Karim is a Ph.D. student at the University of Guelph, Canada. E-mail: sumon_lk@yahoo.com.*

Manuscript received on 28 June 2012 and accepted for publication on 24 August 2012.

2 OVERVIEW

2.1 Linear Feedback Shift Register (LFSR)

Linear feedback shift register (LFSR) is usually used to generate pseudo-random test vectors. An LFSR is a series configuration of D flip-flops and exclusive-OR (XOR)

© 2012 ULAB JSE

gates. The XOR gates and shift register act to produce a Pseudo Random Binary Sequence (PRBS) at each of the flip-flop outputs.

Its operation is based on principle of polynomial arithmetic in cyclic coding theory. The general structure of n-bit LFSR is shown in Figure 1. $a_{n-1}, a_{n-2}, \ldots\ldots a_0$ are the outputs of n flip-flop of the n bit shift register and a_n is input to the shift register, equal to the exclusive-OR of the feedback signals; that is:

$$a_n = \sum a_i c_i = a_n c_n \oplus a_1 c_1 \oplus \ldots \oplus a_{n-1} c_{n-1}$$

Here the coefficient $c_i=1$ if the flip-flop output a_i is fed back to LFSR input and $c_i=0$ if a_i is not connected to the feedback circuit.An n-bit LFSR has at most 2^n states but all zero-state is prevented because the LFSR would never leave this state. Hence an n-bit LFSR can have 2^n-1 values. By correctly choosing the points at which we take the feedback from an n -bit shift register we can produce a repeatable PRV sequence of length 2n – 1, a maximal-length sequence that includes all possible patterns (or vectors) of n bits, excluding the all-zeros pattern.

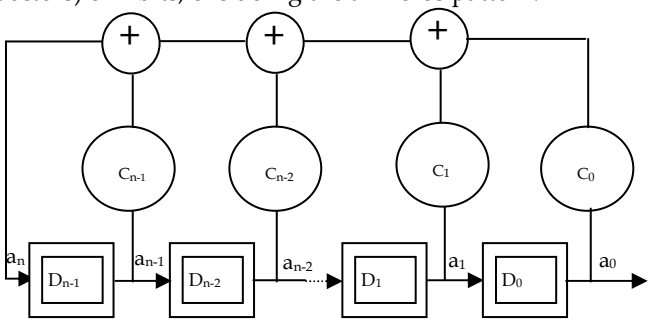

Figure 1: The general structure of LFSR.

2.2 Generalized Linear Feedback Shift Register (GLFSR)

GLFSR are generalized LFSRs that are defined over Galois field $GF(2^{\delta})$, $\delta \geq 1$. It has been shown that GLFSR is significantly more effective as a test pattern generator, providing better fault coverage than the standard LFSR. The general structure of the GLFSR (δ, m) is illustrated in Figure 2. The circuit under test (CUT) is assumed to have $n = (\delta \times m)$ inputs driven by the outputs of the GLFSR. A GLFSR (δ, m) have m stages $D_0, D_1, \cdots, D_{m-1}$, where each stage has δ storage cells of shift registers. Each shift shifts δ bits from one stage to the next stages.

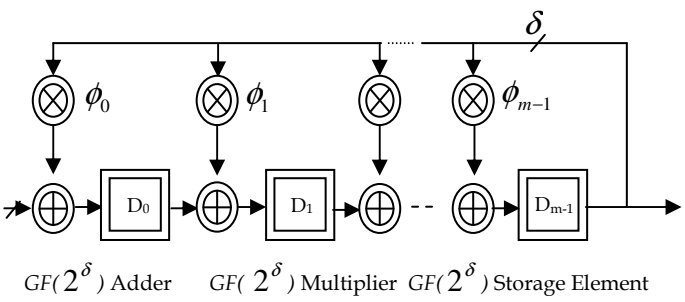

Figure 2: The general structure of GLFSR.

The feedback polynomial of a GLFSR with m stage can be represented as

$$\phi(x) = \phi_0 + \phi_1 x + \phi_2 x^2 + \ldots + \phi_{n-1} x^{m-1} + x^m$$

The coefficients of the polynomial $\phi(x)$ are elements over $GF(2^{\delta})$ and define the feedback connections. The ith coefficient, ϕ_i multiplies the feedback input over $GF(2^{\delta})$, which can be realized using only XOR gates. The GLFSR has different structure depending on the "m" and "δ" value. To generate patterns for a circuit of n inputs, a variety of GLFSR (δ, m) is available, where $(m \times \delta) \geq n$. Different values of δ and m create different types of GLFSRs, capable of generating different types of patterns for the same n-input circuit. As the value of δ increases, the number of XOR gates needed to realize the generator increases. It has been shown that GLFSR is significantly more effective as a test pattern generator [16], providing better fault coverage than the standard LFSR. In the proposed IC testing approach Generalized Linear Feedback Shift Register (GLFSR) in place of LFSR has been used as pattern generator.

2.3 Mixed-mode Testing

Mixed-mode pattern generation includes generation of pseudo-random vectors first and then generation of deterministic test vectors. This approach exploits advantages of both the pseudo-random test technique and deterministic test technique. A generalized scheme of mixed-mode technique is shown in Figure 3. PRV generated form LFSR or other generators can cover a large percentage of easily testable faults. The remaining random pattern resistant faults are Hard-To-Detect (HTD), deterministic test vectors are then generated using same generator and tested. Thereby complete faults coverage can be achieved by this mixed-mode approach. This approach also offers reduced storage requirements, shorter test application time, and smaller area overhead compared to weighted random approach.

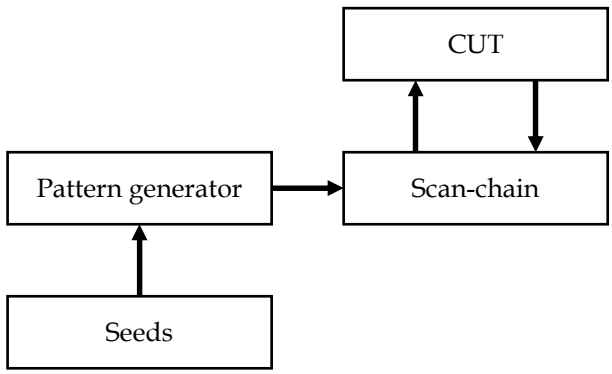

Figure 3: Generalized scheme of mixed-mode technique.

3 Proposed IC Testing Approach

In this section a complete design of GLFSR based IC test processor implementing mixed-mode testing approach has been presented. This proposed design describe a highly randomized, low hardware overhead test pattern generator (TPG) for scan-based built-in self-test (BIST) and also achieve very high fault coverage. GLFSR generated PRV is applied to a CUT to detect all the ETD faults

and then deterministic test sets are generated using the same GLFSR to target the remaining HTD faults using compacted test data called seed. Therefore complete fault coverage can be achieved.

3.1 Test Processor Architecture

The functional block diagram of the IC test processor implementing GLFSR based mixed-mode technique is shown in Figure 4. It consists of micro-UART, control unit, GLFSR, Signature Analyzer (SA), Buffer Register (BR), Information Register (IR), and Random Access Memories (RAMs). Prior to start testing of a CUT, necessary test information is loaded from PC through micro-UART. The information register (IR), test length storage RAM (TL_R), seed storage RAM for random test pattern generation (SD_R), seed storage RAM for deterministic test pattern generation (SDD_R) and signature storage RAM (SG_R) are used to store the test data. Once data loading is completed, testing process is 'ON'. During testing process, test vectors are generated from the GLFSR and are loaded into the BR and are applied to the CUT. Output response of the CUT is captured into the BR and sent to the SA. At end of the test set, the generated signature is compared with that of a fault-free circuit of the same type (reference CUT). If the two signatures are the same, then the CUT is determined as fault-free, otherwise as faulty.

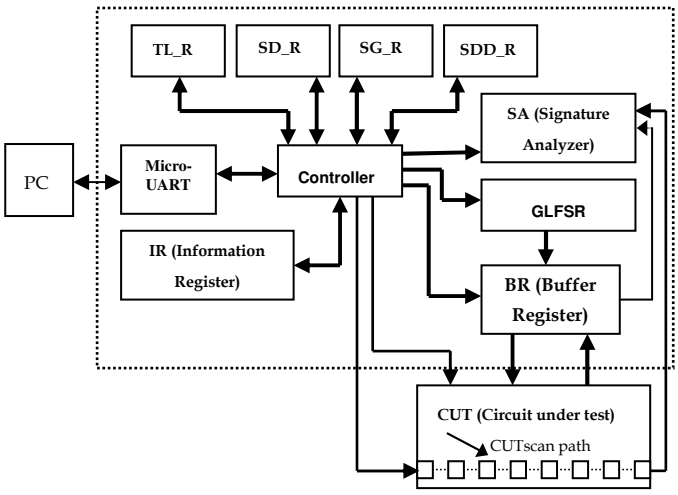

Figure 4: Functional block diagram of the proposed test processor.

3.2 Testing Procedure

The operation of the IC tester has three phases: (a) load data in the IR and the RAMs (b) circuit test and (c) retrieval of test result. Prior to start testing of a CUT the IR, TL_R, SD_R and SDD_R are loaded with appropriate information from PC through micro-UART. In the mixed-mode testing, pseudo-random testing approach is followed by deterministic testing approach. To start pseudo-random testing of the CUT, the controller reset the GLFSR, the BR, and the SA to zero and reads the test length, the seed and the signature from the TL_R, SD_R, and SG_R respectively. The GLFSR is initialized with the seed and generates PRV. The PRV is loaded into the BR and scan path (SP) and then applied to the CUT. The output response vectors of the CUT are captured into the BR and that of secondary output of the CUT into the SP. When the test vectors of the second test cube are loaded into BR and SP, output responses of the CUT due to the first test cube are shifted into the SA. The controller of the tester counts the number of test cubes of PRV applied to the CUT. The testing process continues until the test count equal to the predefined test length for the pseudo-random test. Once the pseudo-random test is completed, the deterministic test starts. The controller reads the seed from the SDD_R and generates deterministic test cube by decoding the seed using the GLFSR. The test cube is applied to the CUT and the output response vectors are captured into the BR and sent to the SA in the same fashion as that of the pseudo-random testing. The controller counts the number of deterministic test cubes applied to the CUT. When the number of the test cubes equals to the predefined number of deterministic test length then the generated signature is compared with that of the reference signature and the status of the CUT is determined as fault-free if the two signatures are the same otherwise as faulty. The procedure of testing is illustrated below:

1. *Load IR with necessary information about the CUT and Number of test sets.*
2. *Read data for test length signature and seed*
3. *Generate test vector and apply to CUT*
4. *Capture output response of CUT and send to SA*
5. *If the number of test vector is no equal to number of predefined test length then go to step 3.*
6. *Compare signature and determine whether the IC is fault free on not.*
7. ***If** the number of test set is not equal to presetted number of test set the go to step 3 else end of test*

4 Fault Simulation Results

Fault simulation experiments have been conducted using FSIM digital fault simulator on ISCAS85 benchmark circuits. Summary of the fault simulation results using GLFSR based mixed-mode approach is shown in Table 1.

TABLE 1
SUMMARY OF THE FAULT SIMULATION RESULT OF ISCAS85 BENCH-MARK CIRCUIT USING GLFSR BASED MIXED MODE APPROACH

Benchmark Circuit	No of Faults	Patterns required	Fault Coverage
c432	524	214	100%
c499	758	225	100%
c880	942	248	100%
c1355	1574	314	100%
c1908	1879	969	100%
c2670	2747	724	100%
c3540	3428	271	100%
c5315	5350	388	100%
c6288	7744	234	100%

The table shows that the total number of test vector including deterministic required achieving complete fault coverage for ISCAS benchmark circuit. It shows that 100% fault coverage can be achieved using mixed-mode approach. The result presented in Table 1 can be compared with that of other researchers [7, 8, 9, 11 and 14]. Comparison of the fault simulation result is presented in Table 2.

TABLE 2
COMPARISONS OF FAULT SIMULATION RESULTS OF THE ISCAS85 BENCHMARK CIRCUITS WITH THAT OF OTHER RESEARCHERS

Benchmark Circuit	*TV1	*TV2	*TV3	*TV4	*TV5	*TV6	*TV7
C432	214	232	352	320	512	1024	320
C499	225	518	-	-	-	-	-
C880	248	179	4544	416	260	1280	160
C1355	314	526	1248	1664	2244	2098	2784
C1908	969	996	4608	2496	2308	5376	3916
C2607	724	360		6240	10766	5888	6400
C3540	271	748	1065	9504	12220	3840	4352
C5315	388	662	1632	1950	1316	2048	1024
C6288	234	69	-	-	-	-	-

*TV1: Number of test vectors required in the present work

*TV2: Number of test vectors using DRM mixed-mode technique obtained by Liakot (2004)

*TV3: Number of test vectors using MP-LFSR based mixed-mode technique obtained by Liakot (1998)

*TV4: Number of test vectors using weighted random technique obtained by Iftekhar (1995)

*TV5: Number of test vectors using weighted random technique obtained by Wunderlich (1990)

*TV6: Number of test vectors using weighted random technique obtained by Waicukauski et al. (1989)

*TV7: Number of test vectors using weighted random technique obtained by Lisanke et al. (1990).

The sign '-' in Table 2 indicates the unavailability of the actual data. It shows that the proposed GLFSR based mixed-mode approach is capable conducting IC testing with 100% fault coverage using much lower number of test vectors that that of other researchers.

5 CONCLUSION

A novel pattern generator GLFSR based test processor has been presented in this paper. In this testing mixed-mode approach has been implemented for IC testing. The detail design of the test processor and testing procedure are discussed. The proposed approach can test IC effectively with reasonable fault coverage and have the potential to detect faults effectively. The test patterns generated by the proposed method are applied to the ISCAS bench mark circuits. The fault simulation results show that the proposed approach requires much fewer patterns than other approaches. This can be significance for the faults detection of very large circuits with a large number of inputs.

REFERENCES

[1]. D. K. Pradhan, S. K. Gupta, "A new framework for designing & analyzing BIST techniques and zero aliasing compression", *IEEE Transactions on Computers*, 40, pp.743-763, 1991.

[2]. R. Rajsuman, *System-on-a-chip: Design and Test*, Artech House, Boston, 2000.

[3]. L. Ali, R.Sidek, I. Aris, M. A. Mohd. Ali, and B. S.Suparjo, *Challenges and Directions for IC testing, Integration,*The VLSI Journal, pp. 17-28, Vol 37(1), Elsevier Science, Netherland,2004.

[4]. Nadeau_Dostie, "Design for At-speed Test, Diagnosis and Measurement", K. A. Publisher, Boston USA, 2000.

[5]. R. W. Bassett, B. J. Butkus, Dingle et al.,"Low cost testing of high density logic components", *Proceedings of International Test Conference*, pp. 550-557, 1989.

[6]. N. Jarwala, and C. W. Yau, "Achieving board-level BIST using the boundary-scan master",*IEEE Proceedings of International Test Conference* pp. 649-658, 1991.

[7]. A. P.Strole, and H. J. Wunderlich, *TESTCHIP: A chip for weighted random pattern generation, evaluation and test control,* IEEE Journal of Solid-State Circuits, pp. 1056-1063, 1991.

[8]. I. Ahmed, VLSI circuits testing using probabilistic approach, Ph.D. Diss., UniversitiKebangsaan Malaysia,1995

[9]. J. A. Waicukauski, E. Lindbloom, E. B. Eicheblberger and O. P. Forlenza, *A method for generating weighted random test patterns*, IBM Journal of research and development Vol. 33(2):149-161, 1989.

[10]. J. A.Waicukauski, and E. Lindbloom, "Fault detection effectiveness of weighted random patterns,"*Proceedings of International Test Conference, pp. 245-255*, 1988.

[11]. L. Ali, Development of a functional digital integrated circuit testing system using mixed-mode technique. Ph.D. Thesis, Universiti Putra Malaysia, 2004.

[12]. L. Ali, R. Sidek, I. Aris, R.Wagiran, M. A. Ali, and B. S. Suparjo, "Development of FPGA-based functional IC Testing System", *ROVISP'2005*, Penang, Malaysia,2005.

[13]. C. V. Krishna, A. Jas, and N. A. Touba, "Test vector encoding using partial LFSR reseeding,"*In Proceedings of International Test Conference*, pp. 885-893, 2001.

[14]. L. Ali, Design of a processor chip using multiple polynomial, multiple seed linear feedback shift register. M.Sc. Thesis, UniversitiKebangsaan Malaysia, 1998

[15]. S. Hellebrand, S. Tarnick, J. Rajski, and B. Courtois, "Generation of vector patterns trough reseeding of multiple–polynomial linear feedback shift registers," *IEEE Proceedings Of International Test Conference*, pp. 120-129, 1992.

[16]. S. Hellebrand, S. Tarnick, S. Venkataraman, and B. Courtois, "Built-in test for circuits with scan based on reseeding of multiple–polynomial linear feedback shift registers,"*IEEE Trans. on Comp. Vol.* 44(2), pp. 223-233, 1995.

[17]. D. K. Pradhan, M. Chaterjee, "GLFSR- a new test pattern generator for built-in-self-test'"*IEEE transactions on Computer-Aided Design of Integrated Circuits and Systems, Volume* 18(2), pp. 238-247, 1999.

Mohammod Akbar Kabir received his M.Sc. and B.Sc.(Hons.) in Computer Science from the University of Dhaka in 2000 and 1998, respectively. Currently he is working as an Assistant Professor at the Dept. of Economics, University of Dhaka. He also served as an Assistant Programmer at the Dept. of ITOCD, Bangladesh Bank and as a Lecturer, Dept. of Computer Science, Dhaka City College. His research interests are in the area of VLSI Design and E-Commerce.

Md. Nasim Adnan received M.Sc. in CSE from Bangladesh University of Engineering and Technology (BUET) and B.Sc. in CSE from Khulna University. Currently he is working as an Assistant Professor in the Dept. of Computer Science and Engineering, University of Liberal Arts Bangladesh (ULAB). He also served as a Deputy Director in the Dept. of ITOCD, Bangladesh Bank. His research interest includes Data Mining, Database Systems, Software Engineering, Software and Systems Testing, and E-Commerce.

Lutful Karim has been working as a faculty member of Computer Science in Islamic University of Technology (IUT) since 2000. Now, he is a Ph.D. student at the University of Guelph in Canada. He has authored several refereed conference and journal publications, and been a member of organization committee and technical program committee in several international conferences. His research interest includes Wireless Communications, Wireless Sensor Network, Fault Tolerance and E-Commerce.

Student Learning Management Based on Collaborative and Interactive Information System

Muhammad Pasha, Syed Akhter Hossain, Md. Kabirul Islam

Abstract— Student Learning Management (SLM) practices with information systems are common and widely used in the Higher Educational Institutions (HEI) for managing and organizing different levels of learning of students in order to ensure qualitative aspects of learning. At present, SLM practices are based on interactive Information System and through the Virtual Learning Management System (VLMS), this role of delivering the learning contents for different levels of learning of the university students can be very effective. But this VLMS by no means provides learning assessment of the students. University teachers are using online based smart tools such as Blogs, Wiki , etc., consisting of questionnaires or comments to manage the Interactive and Collaborative Learning (ICL) today. Although the proposed system consists of all these components of VLMS, this work is based on research and a focus on Collaborative and Interactive Information System (CIIS). The intended research is based on initial investigations of practical problems that exist in the class room and several other interactions with the pedagogy and with other learning factors. The designed system supports effective learning environment for the students of HEI to share their problems regarding class lectures/lessons and related questions for the suggestions, not only from the mentors but also from other students at the same time which encourages peer learning. This also shares individual learning experience with the similar problems. A case study based on the methodology was designed to describe how individual teachers may use the proposed system for SLM in their own personal settings. The evaluation used an interpretive methodology to investigate three research areas: Anchored Discussion, Teacher-Students' Self Inventiveness and Professional Peer Design Review. Experimental observations of student and teacher blogs illustrate how the designed system encourages students and teachers to look beyond classroom learnings.

Keywords—Student Learning Management (SLM), Higher Educational Institutions (HEI), Virtual Learning Management System (VLMS), Interactive and Collaborative Learning (ICL), Collaborative and Interactive Information System (CIIS), pedagogy.

1 INTRODUCTION

The rapid increase of Internet use enables the educational institutions to add new ideas on their education system by adding new features like content based Course Management System (also known as Learning Management System or LMS) like Moodle [1], Blackboard [2], WebCT [3] etc for last ten years [4]. With the help of these LMSs, educational institutions are moving away from the traditional in-class environment to the new digital phenomenon where teaching is also assisted by computers [5].

- *Muhammad Pasha is with the Technological and Implementation Team of Khan Academy Project 2012. E-mail: muhammadpasha027@gmail.com*
- *Syed Akhter Hossain is with the Department of Computer Science and Engineering of Daffodil International University, Dhaka, Bangladesh. E-mail: aktarhossain@daffodilvarsity.edu.bd*
- *Md.Kabirul Islam is with the Department of Computer Science and Engineering of Daffodil International University, Dhaka, Bangladesh. E-mail: kislam@daffodilvarsity.edu.bd*

Manuscript received on 2 August 2012and accepted for publication on 30 September 2012.

© 2012 ULAB JSE

An LMS ensures the students' access to have their learning materials, particularly lecture notes and assessment tasks. Some other information e.g. up-to-date announcements, assignments and discussions are also checked which are given by the faculties [6].

These popular LMSs facilitates the educational institutions for managing both the faculty and the students by providing services to ensure consistency, track, report, evaluations, continuous service proficiency etc [7], rather than Collaborative Learning, whereas collaborative learning can play a major role in proper learning at the higher level.

As HEIs are committed to make the students good learners, which is impossible without interactions between students, this brings commitment to make the students' collaborative learning as a simple interactional processes or ICL, but in a setting parallel with the current or existing system of education. This is necessary to have small-episodes of synchronous interaction, and apply the mixture of different learning methods to the students so that they can grasp it easily. In this paper, we investigated on a collaborative LMS, which was developed with the hope that adopting by others may increase use of modern learning system. The system is based on the concept of collaborating through LMS facilitate by the course teachers.

The primary purpose of the customized LMS was to provide immediate feedback after the end of face-to-face class on the basis of questions, comments, etc. posted by the students to find out their levels of understanding. An online Teacher Student Classroom Feedback System (TSCFS) is designed and developed considering the users e.g. teachers as well as students to make use of personal reflections, and feedback (both formal via comments on course blog and informal via email or chat) once a topic is discussed in the class. The paper concludes by making a number of recommendations based on some of the successes which have been resulted from observations on technology use and effective delivery and pedagogy.

The proposed system which is named TSCFS is developed in the year 2009 by customizing an open source social networking engine named Elgg [8] targeting a web based interactive system that can be used for monitoring the teaching and learning as well as content analysis. Elgg is an open source social networking framework that facilitates individuals and organizations to create an online social environment. It offers blogging, microblogging, file sharing, networking, groups and a number of other features.

2 Related Works

A Learning Management System (LMS) is aimed at managing an e-learning environment, establishing the organization and delivery of content, administrating resources and tracking learning activities and results [9] and [10]. The popular LMS that are in use today are either commercial products (e.g. WebCT, Blackboard, TopClass), or free open source products (e.g. ILIAS, Manhattan Virtual Classroom). Another pattern of LMS exists, which are customized software systems that serve the instructional purposes of particular organizations. LMS that belong to the third category are exponentially increasing, as most education and training institutions are building or planning to build their own LMS. This is due to the fact that a customized LMS will fit better their specific educational/learning purposes i.e. Collaborative Learning, and proves to give a good return of investment over the years. However, the design and implementation of such systems that enables Collaborative Learning is not an easy task, since they are complex systems that incorporate a variety of organizational, administrative, instructional and technological components [11] and [12].

Learning in collaboration with others is the foundation of Collaborative Learning. A Collaborative Learning means inter subjective meaning-making [13] and [14] with the interactions of a group of people, from which group cognition [15] comes out. Moreover, a Collaborative Learning refers to the environments as well as methodologies, in which students or learners directly or indirectly take part in a common activity. During the activity, each individual not only depends on but also is responsible to each other. In recent years, Collaborative Learning has created a field of research on supporting ICL with the help of information system [16].

A number of researchers edited their collections earlier specifically focusing online collaborative learning researches. Hiltz [17] emphasized online collaborative learning by implementing her virtual classroom that enabled participation and interaction of the users, Dillenbourg [18] noted the cognitive and computational approaches and [19] expanded the term online collaborative learning as an established technique for teaching and learning in which the learners in a group have their learning responsibilities for each other and for themselves. However, Curtis and Lawson [20] explored the term. In another work, Lindblom-Ylanne and Pihlajamaki [21] noted the online collaboration as a written environment through an online collaborative network. Macdonald [22] pointed the online collaborative learning as a product that helps the educators to process easy assessments. On the other hand, Wilcox et al. [23] identified the use of collaborative approaches to student learning, and a range of factors which impact the student experience including learning, teaching and assessment strategies as well as the quality of staff student relationships.

All the above researchers pointed online collaborative learning in their respective research that supports and facilitates group processes and group dynamics in a setting that is not possible with face-to-face interactions or in-class direct participations. This type of learning is typically tailored for use by a group of learners, working either synchronously or asynchronously, through online or at the same work station or across with networked computers.

Considering the above major roles of an online collaborative learning system, the proposed LMS is referred to as the Teacher Student Classroom Feedback System (TSCFS).

A comprehensive literature review of semi-automated, collaborative assessment and feedback is beyond the scope of this paper, however a review of the development of online assessment and feedback systems is also available by Shortis and Burrows [24]. Hepplestone et al. [25] provides a ten-year catalogue of the literature associated with assessment feedback. Less recent publications provide further background, for example Valenti et al. [26] provides a review of ten systems and Heinrich et al. [27] provides a comprehensive review of a wide variety of tools to support essay-type assessment. However, both the technology and the practice continue to advance, and there are many examples of recent thinking around the effectiveness and utility of assessment feedback [28] and [29].

3 Method

A LMS, is a software system specifically designed and marketed to educational institutions. It supports teaching and learning, and provides an electronic platform for upload of learning materials such as various formatted files, lecture notes etc. along with presentation of study materials and organization of student activities. These systems are also commonly referred to as Virtual Learning Environments (VLE) and Course Management Systems (CMS) [30].

Heirdsfield et al. [31] pointed the current LMSs those

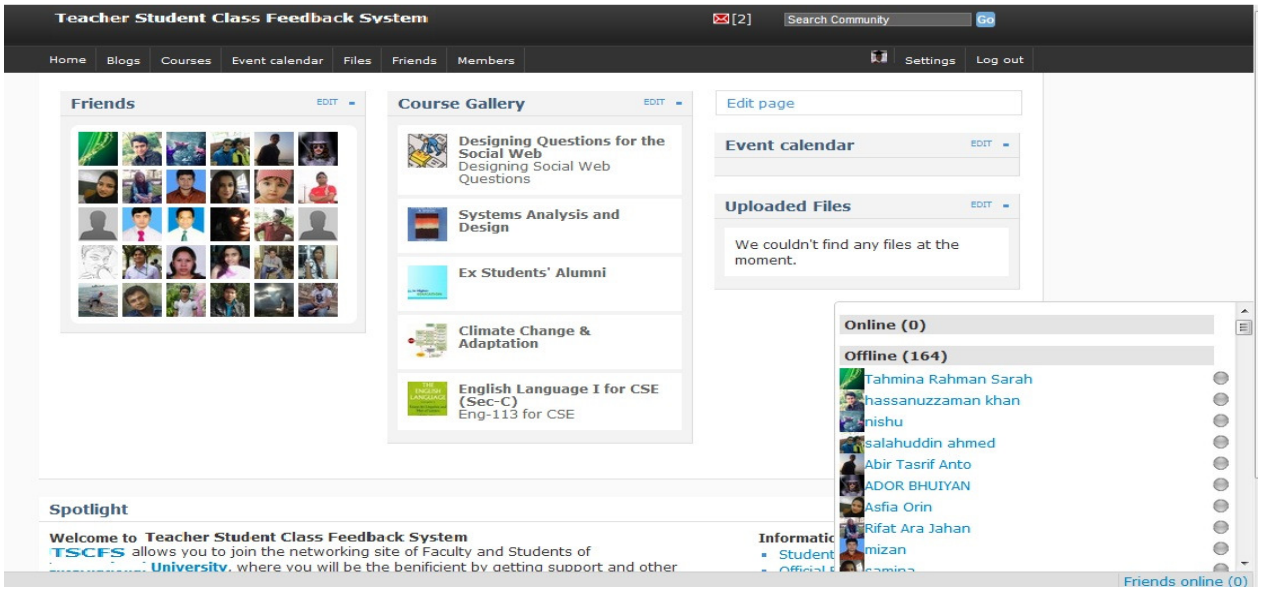

Figure 1: User's home page in TSCFS.

are popular worldwide and used as a tool that enables learning facilities such as discussion forums, chat, blogs and announcements to enhance the learning experience, because it ensures "human interaction, social learning, and possibilities for collaboration and ways for keeping in touch with students". An educator appears to value over chat as well as blogs because it could be used for a range of activities including discussion and collaboration

On the other hand, most of the students of higher education, are already keen users of digital technologies these days, those are often well integrated into their everyday lives [32], the use of online social networking sites and new media in education can be very motivating. At the same time, while students may be adept at using new technologies for social and entertainment purposes, they may not always know how to use them appropriately for educational purposes [33] and [34] or indeed professional purposes such as, in this case, an explanation of lectures, notes or other critical angles.

Teaching the subject material in a context suitable for all of the students is always difficult [35]. Incorporating the new techniques such as online LMS that enables collaborative learning, the system allows educators to gain on students' pre-existing enthusiasm for digital technologies, as well as guiding them in the appropriate educational and professional applications of those technologies. As the requisite software is easy to use, and online storage (and syndication) is straightforward.

Considering the major and important roles played by the LMS, the system also developed a social community pattern for learning that ensured "the power of the network and to exploit social interactions and connectivity" [36]. This article focuses on the authors' experiences with a TSCFS over a two year period 2010-2011, as the first author worked for design, develop and implement the LMS on different departments, however the other authors taught into a range of university courses using the LMS, in their first and second year undergraduate courses at a university in Bangladesh. The objectives of this study are:

1. To identify the LMS with required features
2. To find out the Teaching-Learning activities of the TSCFS.

4 The TSCFS

The web-based Classroom Feedback System (CFS) e.g. TSCFS as shown in Figure 1; is a student LMS or CMS through which students can provide their feedback asked by the course teacher through web on a specific lecture immediately after the end of that lecture. In addition, the system also provides some services which are closely related with the group of students along with their instructor of a course, such as various types of File Sharing, Message Services through personal Email account, Personal Notifications for a Course Feedback or Update or Notice, and a Chat Box for quick conversation.

A TSCFS helps a teacher to track the learning progress of a group of students as well as completion of tasks assigned to them. However, the system also provides help to a teacher to identify an area, where the students need help. The proposed system first introduced to the teachers and then to a specific group of students for educating a group of Computer Science and Engineering (CSE) students as a pilot project. After that, it was introduced to other seven departments for facilitating the teachers as well as students to share their asking, which promotes online interactions as well as CIIS especially after the end of a class where face–to-face sessions are unavailable.

Moreover, providing the facilities specified for collaborative learning, the system also facilitates to notify a user for even every single update i.e. blog posts, feedback, file upload and any announcement or notice or event, regarding his/her courses. A notification is not only sent to his/her mail box of the system, it is also sent to his/her

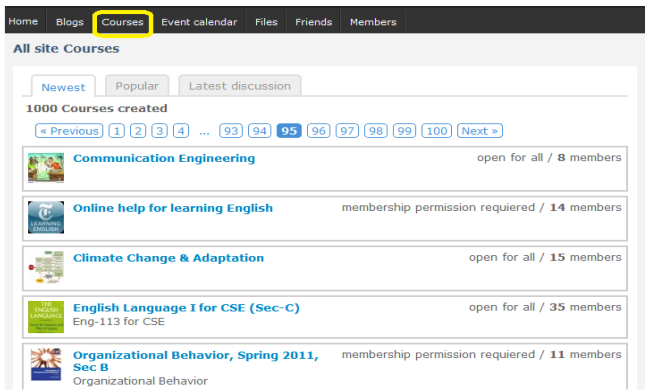

Figure 2: List of courses.

email address (once the option is set by the user). Clicking the notification, the user can check the latest update or a feedback or even a feedback on his/her earlier asking in a course blog.

5 Applying Proposed TSCFS

The online TSCFS consists of Course Gallery, Event Calendar, Personal Blogs, Personal File Management and Sharing System along with Personal Notifications for Course Feedbacks or Updates or Notices through Personal Message Services as well as user's email account and a quick conversation service like a Chat Box.

Figure 3: A course in TSCFS.

5.1 Course

A teacher can create one or more courses by providing three or four basic information i.e. Full name of the course, Course Code, Course Description, etc. She/he also can define the method of permission for membership. If she/he selects 'Closed Membership', then a student needs to get permission from the instructor, to join the course blog, otherwise, if the course membership is selected as 'Open Membership', then any user can be a member of a course by clicking 'Join Course Blog' shown in Figure 2: List of Courses. When a course is successfully created, it is added to the database of the TSCFS and shows in the list of courses. So that any user can easily find the list of newly or previously created courses by clicking the 'Course' tab, as it shown in Figure 2: List of Courses.

A Course consisting of three things: 1) Course Blog, 2) Course Blog Files and 3) Course Calendar, which is appears left menu of a course page as shown in Figure 3: A Course in TSCFS.

5.1.1. Course Blog

After selecting a course from his/her Course Gallery, when one student clicks on the 'Course Blog' button, a list of written blogs appears on the screen with an order of the latest 'Blog Post' stands on the top and the older posts just under the latest one and so on. A user can check the latest 'Blog Post' consisting questioners, writings etc. by seeing the title or headline of the post. The proposed system confirm to show the name and image of the writer e.g. the teacher, and the posting date along with posting time, just below the Blog's headline.

Clicking on the headline, a writing panel appears where a student can place his/her comment or feedback, as per the teacher's asking.

5.1.2. Course Blog Files

When a course member wants to get a file i.e. lecture notes, presentations, audio/video files etc. which has already been shared commonly by the course teacher or students for others, the blog member clicks on the 'Course Blog Files'. A list of files appears on the screen for that specific course, with an order of the last shared file on the top and the older files just one by one, under the latest one. A user can check the latest files by seeing the title. The proposed system shows the Name and Picture who uploads a file i.e. the Teacher or the student, along with the date and time of uploading the file, below the File's headline.

5.1.3. Course Calendar

A student can get all announcements or dates of upcoming events i.e. quiz, assignment, class presentation, exam etc. through the course calendar.

5.2 Course Gallery

After the creation of a course successfully by the teacher, the course instructor becomes the admin of that particular course. Therefore, the course appears on the 'Course Gallery' of the teacher, as it is shown in Figure 1: User's Home Page in TSCFS. When a student successfully becomes a member of a course, the course is also added to his/her 'Course Gallery'. A 'Course Gallery' is always shown on the 'Home' and 'Profile' page for both teachers and students

5.3 Event Calendar

When a teacher adds any event on the course calendar, the event or announcement is shown not only in the

course calendar but an event is also appeared on the 'Event Calendar' section of the dashboard or home page as well as profile page of the users as it **is** shown in Figure 1: User's Home Page in TSCFS. At the same time, a personal notification is immediately sent to the message box of the course members as well as their email addresses.

5.4 Personal Blogs

Members have been given the privilege to write any personal blog regarding a matter which might not be his/her class but seemed useful or interesting to him/her. A comment section is also available to in a personal blog, where the readers can comment or suggest to a blog writer. A personal blog is not regarding with regular classes, enables a group discussion on a specific topic with similar minded students who are interested on that topic. Therefore a learning environment has been developed.

5.5 Personal Files Management and Sharing

A file sharing privilege is also given to all members to upload not only document formatted files but also pictorial formatted files can be shared, at the same time, multimedia files i.e. audio and Video can also be shared to all or a group of users. An uploaded file can be set private or shared to a group of users, i.e. students of a same course. Moreover it can also be set accessible for personal friends or login users or public. And through the comment section anybody can get feedback on his/her uploaded files.

5.6 Message Services and Quick Conversation

The system enables a personal message service. Any user can write a personal message to other. When a message comes in a user's inbox, a red message box appeared on the top of the pages of a user as it is shown in Figure 1: User's Home Page in TSCFS. Moreover, the system automatically forwards the message to his/her email account.

A quick conversation box or chat box is available for the users to enable easy communication or live chat so that any user can see who (from his/her friend list) are available or online at once (as it is shown in Figure 1: User's Home Page in TSCFS), and ask and share his or her personal quires to a teacher or other classmates when s/he has a query and others are available on online.

5.7 Notification Services

The red message box is seen (as it is shown in Figure 1: User's Home Page in TSCFS) for any notification or latest updates related to a user's personal blog, courses, event calendar, or etc. At the same time, all the notification messages are sent to the email account of a user. However a user can set his/her criteria of getting notification to his/her email account, e.g. personal or group notification, etc. S/he can disable all of his/her notifications forwarded to email account if s/he wants.

A block diagram of the proposed TSCFS is described in Figure 4: Block Diagram of the TSCFS; shows when a teacher creates a course blog, a student can find the course blog on the 'Course Menu'. A student can access

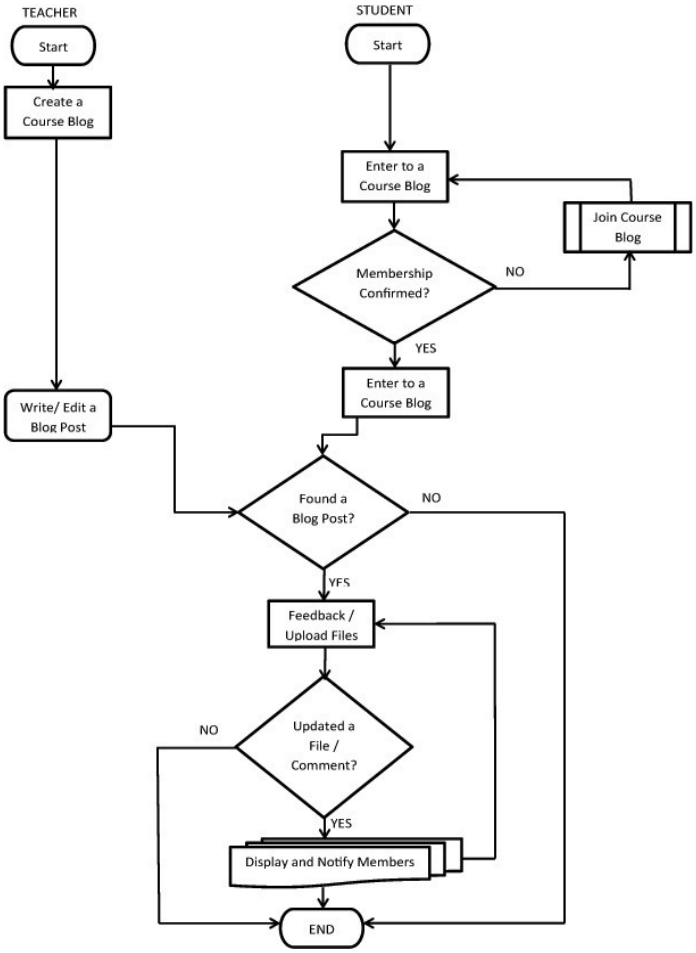

Figure 4: Block diagram of TSCFS.

into a course blog while s/he confirms his/her membership in the course blog by the course teacher. After a teacher writes something, the students can see the blog post. A feedback of the teacher's askings can be given under the teacher's blog post. It can be a comment or other sort of feedback or different types of files as per users' askings.

When a feedback is given or any file is uploaded or any other updates are done, a notification is sent to all the course blog members including the course teacher as it also shown in Figure 4: Block Diagram of the TSCFS. The system archives the date and time of the update and shows it to the members including updating date, time as well as the name of the member by whom the feedback, post or file uploading has been done. If a user fails to post or for improper ways of giving feedback, no posts or update notification is sent to the members of the course blog as there is shown no update in the course blog.

6 Experimental Observations and Findings

6.1 Anchored Discussion

One of common uses for a TSCFS is anchored discussion. An anchored collaboration is a good structure to use for review activities at the end of a certain time period, how-

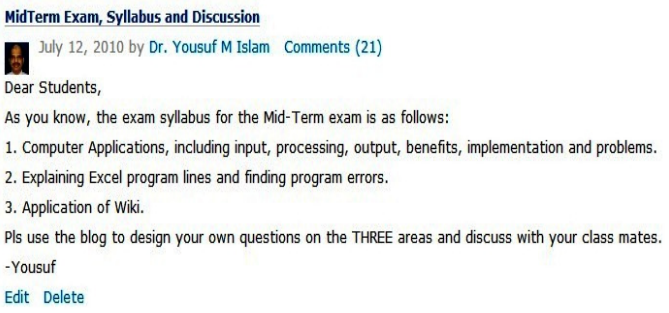

Figure 5: Anchored discussion on exam questions.

ever, is also useful for supporting focused discussions in between the educator and the students as well. Common examples of an anchored discussion are students studying for a midterm or a final exam by posting and critiquing answers to sample questions, or asking students about exam questions or an (anchor) assignment, presentation or quizzes as it is shown in Figure 5: Anchored Discussion on Exam Questions.

It was simple to implement anchored collaboration particularly in a web based CFS, because the space for collaboration can literally be the same space as the anchor. Anchored collaborations have been used in Architecture for debates [37], in CS to discuss papers [38], and in several disciplines to discuss homework. It is described in Figure 5: Anchored Discussion on Exam Questions. The anchor is the faculty member who asked four questions to his students regarding the exam questions after the exam.

6.2 Teacher-Students' Self Inventiveness

It is observed that users of specific course did use an online CFS for anchored and focused discussions. A mechanism was used by the students to writing their comments at the end of an anchor's comment. Although there was no explicit support for tracking "threads" of comments (e.g., when one note comments on another note, which comments on another note; [39]), a variety of mechanisms were invented by users (teacher or students) for marking threads or answering a specific user's question as it is shown in Figure 6: Student's comment on Classmate's Asking.

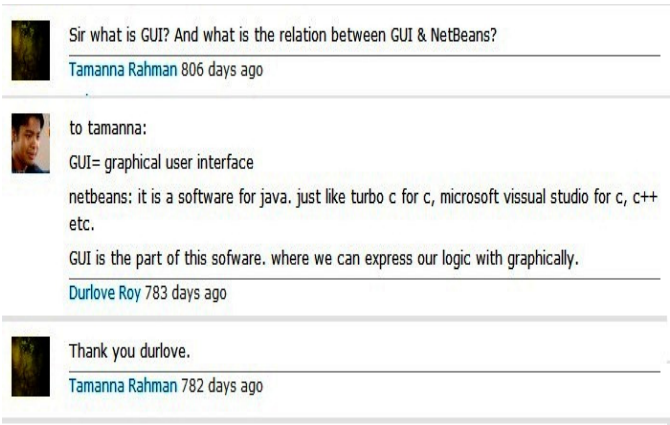

Figure 6: Students' comment on a classmate's asking.

An example of two Students' self inventiveness is seen in Figure 6: Student's comment on Classmate's Asking, where a student asked the teacher about something and another student responded and replied to his classmate's asking as he knew the answer.

6.3 Professional and Peer Design Review

Starting in a course of Human Resource Management, but later being copied in several classes (e.g., English, Economics, Business Communication and Bangladesh Studies), students were asked to post their work for others to review—sometimes peers, but sometimes experts from the outside. This kind of review can perform several roles. It can be a motivating activity that helps students, view their work from a new perspective. It can be an activity that highlights a particular aspect of the students' work (e.g., when the teacher sets the ground rules about what's to be critiqued). It can also be an activity that allows a large class to see what others are doing, in order to benchmark their own work.

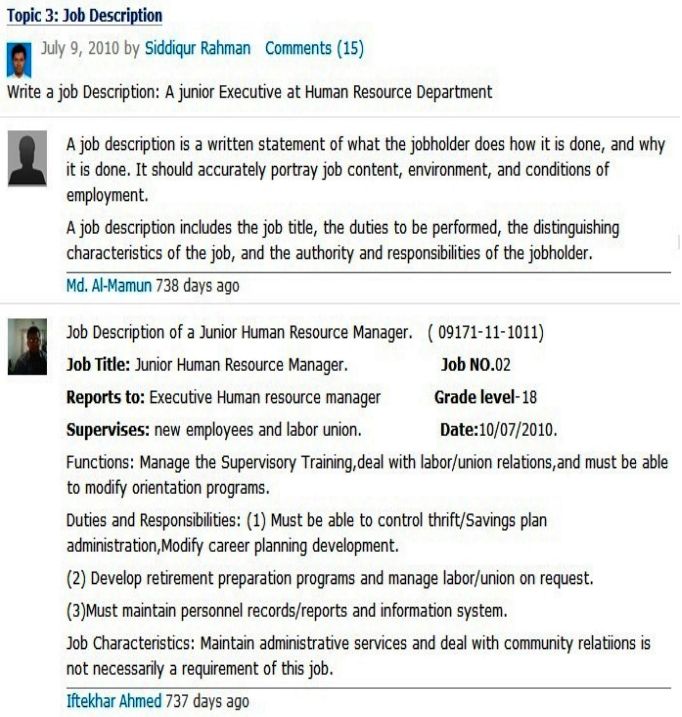

Figure 7: Students' writing by seeing classmate's writings.

We highlight one of these uses to provide more details as it is shown in Figure 7: Students' Writing by Seeing Classmate's Writings. In one Human Resource Management class, students were asked to write their job description as a junior executive at Human Resource Department for each of their projects on the course blog page as it is described in Figure 7: Students' Writing by Seeing Classmate's Writings. Students were asked to go through different resources i.e. books, internet, etc. to develop their projects. The goal of this structure was to provide stu-

dents with an opportunity to review each others' projects and to help one another in answering their research questions.

This activity was judged to be fairly successful. The course supervisor observed and gave instructions when the students were updating their writing by seeing others, at the same time taking the supervisor's instructions seriously. The students enjoyed the experience, particularly reading one another's postings and seeing. Moreover, the course instructor enjoyed how the peers responded to the students' work that ensures the peer design pointed by Zimring et al [40].

7 Discussions

A LMS or CMS like TSCFS is only one of several web-based CSCL tools that have been created for learners. It is justifiable to looking at the bargains that were chosen between others and the proposed LMS, and to see how those bargains impact the kinds of applications that can be authored with these tools. In general, the TSCFS does not frame the process of students tests, quizzes, results or etc. as other LMS or CMS tools do, which makes it desirable in some settings (e.g., with adult learners) and less desirable in others.

Moodle, WebCT and Sakai [41], have all been used successfully in educational contexts. They aim at supporting teachers in creating furthermore managing online courses. All the same, with respect to providing teachers with information about their students, they mainly show students' track reports or of how the overall class is resulting by using the system rather than focusing on peer teaching or collaborative learning which can only be possible with a CIIS.

A web based CIIS like TSCFS is a multi-representation tool where students are asked to make a statement about a discussion question, and then appoint in a progressed discussion assisted by the educator, about the question. The online CFS offers ease threaded discussions, but it supports anchored collaboration together with a setting so that threads of discussion can be accessed from any page on that website. The system opens the doors to grease the wheels to a sort of discussion where users are propelled to identify the kind of note that they are posting, as a way of encouraging deliberation about the collaboration process ensuring not only the Anchored Discussion, but also the Teacher-Students' Self Inventiveness at the same time Professional Peer Design Review.

Despite the other collaboration spaces such as CoNote [42], SpeakEasy/MFK [43] & [44], and CaMILE [45], [46] & [47] are perhaps better conformed where the users need a more spotlighted and more confined activity, such as elementary school or middle school students. But at the tertiary level of education, the TSCFS can be a collar as it focuses CSCL more compared with those. Novice students who are less familiar with Uniform Resource Locators (URLs), page editing versus page viewing, or Hyper Text Markup Language (HTML), do not need to know anything about those. Usage of TSCFS as like as these other tools, is also controlled. Users sign in, so that their identity is known and each user's contribution can be tracked. Users cannot delete or modify other users' postings. The CIIS offers these features: It is easy to use, individual contributions can be identified with date and time, and it is not possible for one user to modify or delete another user's posting but seeing only.

Authorized users such as course instructors or administrators will be able to create and manage their courses whereas students can join and participate to give their feedback from anywhere in the world through web. At the same time, any member e.g. a teacher or a student can start writing and sharing personal blogs on a topic of his/her interest that ensures getting feedback from others, which enables a chance of - the more students practice and get feedback on their writing, analyzing, or problem solving, the more adept they should become [48].

Originally, outsiders who do not have their account in the system may also make their registration through their email addresses, and send join requests to the system for the available courses. However, the University ruled to registrar an account via University email addresses only to adapting the learning portal system as the university wanted only authorized individual and facilitators to use the system.

8 Conclusion

The TSCFS is a flexible SLM tool based on CIIS, but that very flexibility may limit some of its applicability, as described earlier. The points of the above sections were to show that the SLM tool seems well-suited to the characteristics of higher education. Activities using the TSCFS have been invented time to time and costumed on demand by a fairly large number of teachers as well as students. We have only started to gather data suggesting that some of these activities have been effective in supporting student learning. We believe that the system can be effective, when sufficiently integrated with classrooms, as described in the final section where we consider why the TSCFS has been successful in encouraging invention by its users.

Acknowledgment

The authors wish to thank Department of Computer Science and Engineering of Daffodil International University, Dhaka, Bangladesh for supporting this research work.

References

[1] Moodle (2012). Moodle, Retrieved April, 2012, from http://www.moodle.org

[2] Blackboard (2012). Blackboard, Retrieved April, 2012, from http://www.blackboard.com/

[3] WebCT (2012). WebCT, Retrieved April, 2012, from http://www.webct.com/

[4] Moore, M. G., (2003). Moodle Open Source Course Management System: A Free Alternative to Blackboard, IT899 Masters Project in Instructional Design and Technology (Dr. Armand Seguin, Dr. Harvey Foyle, Dr. Jane Eberle)

[5] Richardson, C. J., & Swan, K. (2003). Examining social presence

in online courses in relation to students' perceived learning and satisfaction. JALN, 7(1), 68-88

[6] Petrovic, T., & Kennedy, G. (2005). How often do students use a learning management system in an on-campus, problem based learning curriculum, Tom Petrovic and Gregor Kennedy, Biomedical Multimedia Unit, Faculty of Medicine, Dentistry and Health Sciences, The University of Melbourne.

[7] Brown, A., & Johnson, J. (2007). Five advantages of using a learning management system.(www.microburstlearning.com)

[8] Collier,G,(2002)."Elearning application Infrastructure", Sun Microsystems white paper, http://www.sun.com/products-n-solutions/edu/whitepapers/index.html, January.

[9] Elgg (2009). Elgg, Retrieved November, 2009, from http://www.elgg.org.

[10] Oleg, S., & Liber, B.(1999). A framework of pedagogical evaluation of Virtual Learning Environments. Available online at [http://www.jtap.ac.uk/reports/htm/jtap-041.html].

[11] Moore, M. G., & Kearsley, G. (1996). Distance Education: A Systems View, Wadsworth Publishing Company.

[12] Carlson, P. (1998). Advanced Educational Technologies – Promise and Puzzlement, Journal of Universal Computer Science (JUCS), (Special Issue), 4(3).

[13] Koschmann, T. (2002). Dewey's contribution to the foundations of CSCL research. In G. Stahl (Ed.), Computer support for collaborative learning: Foundations for a CSCL community: Proceedings of CSCL 2002 (pp. 17-22). Boulder, CO: Lawrence Erlbaum Associates.

[14] Suthers, D. D. (2006). Technology affordances for inter-subjective meaning-making: A research agenda for CSCL. International Journal of Computers Supported Collaborative Learning, 1(3), 315-337.

[15] Stahl, G. (2006). Group cognition: computer support for collaborative knowledge building. Cambridge, MA: MIT Press

[16] Dillenbourg, P. (1999a). Introduction: What do you mean by "collaborative learning"? In P. Dillenbourg (Ed.) Collaborative learning: Cognitive and Computational Approaches, p. 1-19. Pergamon: Oxford

[17] Hiltz, S. R. (1988). Collaborative learning in a virtual classroom: Highlights of findings. In Proceedings of the 1988 ACM conference on Computer-supported cooperative work (CSCW '88) (pp. 282-290). New York: ACM. http://dx.doi.org/10.1145/62266.62289

[18] Dillenbourg, P. (Ed.). (1999b). Collaborative learning: Cognitive and computational approaches. Amsterdam, NL: Pergamon, Elsevier Science. In (Ed.).

[19] Preston, D. (2005). Pair programming as a model of collaborative learning: A review of the research. Journal of Computing Sciences in Colleges, 20(4), 39-45.

[20] Curtis, D. D., & Lawson, M. J. (2001). Exploring collaborative online learning. Journal of Asynchronous Learning Networks, 5(1), 21-34.

[21] Lindblom-Ylanne, S., & Pihlajamaki, H. (2003). Can a collaborative network environment enhance essay-writing processes? British Journal of Educational Technology, 34(1), 17-30.

[22] Macdonald, J. (2003). Assessing online collaborative learning: process and product. Computers & Education, 40(4), 377-391.

[23] Wilcox, P., Winn, S., & Fyvie-Gauld, M. (2005). It was nothing to do with the university, it was just the people': The role of social support in the first-year experience of higher education. Studies in Higher Education, 30(6), 707–722.

[24] Shortis, M. R. & Burrows, S. (2009). A review of the status of online, semi-automated marking and feedback systems. In ATN Assessment Conference 2009. Melbourne, Australia: RMITUniversity. http://emedia.rmit.edu.au/conferences/index.php/ATNAC/ATNAC09/paper/viewFile/205/46

[25] Hepplestone, S., Holden, G., Irwin, B., Parkin, H. J. & Thorpe, L. (2011). Using technology to encourage student engagement with feedback: A literature review. Research in Learning Technology, 19(2), 117-127. http://dx.doi.org/10.1080/21567069.2011.586677

[26] Valenti, S., Neri, F. & Cucchiarelli, A. (2003). An overview of current research on automated essay grading. Journal of Information Technology Education, 2, 319-330.

[27] Heinrich, E., Milne, J., Crooks, T., Granshaw, B. & Moore, M. (2006). Literature review on the use of learning tools for formative essay-type assessment. In e-Learning Collaborative Development. Wellington, New Zealand: Tertiary Education Commission.

[28] Nicol, D. (2010). From monologue to dialogue: Improving written feedback processes in mass higher education. Assessment and Evaluation in Higher Education, 35(5), 501-517. http://dx.doi.org/10.1080/02602931003786559

[29] Price, M., Handley, K., Millar, J. & O'Donovan, B. (2010). Feedback: All that effort, but what is the effect? Assessment and Evaluation in Higher Education, 35(3), 277-289. http://dx.doi.org/10.1080/02602930903541007

[30] LEWS (2009). Learning Management System Review: Final Report. Learning Environments and Web Services, University of Ballarat, Ballarat, Victoria, Australia.

[31] Heirdsfield, A., Walker,S., Tambyah,M., & Beutel, D. (2011). "Blackboard As An Online Learning Environment: What Do Teacher Education Students And Staff Think?," Australian Journal of Teacher Education: Vol. 36: Iss. 7, Article 1.

[32] Cluett, L., Pegrum, M., & Skene, J. (2011). Infecting professional staff with the emerging technology 'virus': How the leadership game has changed. EDUCAUSE, Sydney, 3-6 April. Retrieved June 1, 2011, from https://ocs.arcs.org.au/index.php/educause/ccae2011/paper/view/155.

[33] Cluett, L. (2010). Online social networking for outreach, engagement and community: The UWA students' Facebook page. Paper presented at the Teaching & Learning Forum, Edith Cowan University, Perth, 28-29 January.

[34] Pegrum, M. (2009). From blogs to bombs: The future of digital technologies in education. Crawley, WA: UWA Publishing.

[35] Lawrie, G. A., Matthews, K. E., & Gahan, L. R. (2010). Forming groups to foster collaborative learning in large enrolment courses. In Proceedings of the 16th UniServe Science Annual Conference, (pp. 66-71), Sydney NSW: UniServe Science.

[36] Conole, G., & Culver, J. (2009). Cloudworks: Social networking for learning design. Australasian Journal of Educational Technology, 25(5), 763–782. Retrieved from http://www.ascilite.org.au/ajet/ajet25/conole.pdf

[37] Craig, D., ul-Haq, S., Khan, S., Zimring, C., Kehoe, C., Rick, J., & Guzdial, M. (2000, July). Using anunstructured collaboration tool to support peer interaction in large college classes. Paper presented at the International Conference of the Learning Sciences 2000, Ann Arbor, MI.

[38] Abowd, G., Pimentel, M. d. G., Kerimbaev, B., Ishiguro, Y., & Guzdial, M. (1999). Anchoring discussions in lecture: An approach to collaboratively extending classroom digital media, Proceedings of Computer Support for Collaborative Learning 1999. Palo Alto, CA.

[39] Guzdial, M. (1997). Information ecology of collaborations in educational settings: Influence of tool. In R. Hall, N. Miyake, & N. Enyedy (Eds.), Proceedings of Computer-Supported Collaborative Learning'97 (pp. 83–90). Toronto, Canada.

[40] Zimring, C., Khan, S., Craig, D., Haq, S., & Guzdial, M. (1999). CoOL Studio: Using simple tools to ex-pand the discursive space of the design studio. Paper presented at the Design Thinking Research Symposium, Massachusetts Institute of Technology, Cambridge, MA.

[41] Sakai (2012). Sakai, Retrieved April, 2012, from http://www.sakaiproject.org/portal.

[42] Davis, J. R., & Huttenlocher, D. P. (1995). Shared annotation for cooperative learning. In J. L. Schnase& E. L. Cunnius (Eds.), Computer Support for Collaborative Learning 1995 Proceedings (pp.84–88). Mahwah, NJ: Lawrence Erlbaum Associates, Inc.

[43] Hsi, S., & Hoadley, C.M. (1994). An interactive multimedia kiosk as a tool for collaborative discourse, reflection, and assessment. Unpublished manuscript.
[44] Hsi, S., & Hoadley, C. M. (1997). Productive discussion in science: Gender equity through electronic discourse. Journal of Science Education and Technology, 6(1), 23–36.
[45] Guzdial,M.,Hmelo,C.,Hübscher,R.,Nagel,K.,Newstetter,W., Puntembakar, S., Shabo,A., Turns, J., & Kolodner, J. L. (1997). Integrating and Guiding Collaboration: Lesson learned in computer-supported collaboration learning research at Georgia Tech. In R. Hall, N.Miyake, & N. Enyedy (Eds.), Proceedings of Computer-Supported Collaborative Learning '97 (pp. 91–100).Toronto, Ontario, Canada.
[46] Guzdial, M., Kolodner, J. L., Hmelo, C., Narayanan, H., Carlson, D., Rappin, N., Hübscher, R., Turns, J., & Newstetter, W. (1996). Computer support for learning through complex problem solving. Communications of the ACM, 39(4), 43–45.
[47] Guzdial, M., Turns, J., Rappin, N., & Carlson, D. (1995). Collaborative support for learning in complex domains. In J. L. Schnase & E. L. Cunnius (Eds.), Computer Support for Collaborative Learning 1995 (pp. 157–160). Mahwah, NJ: Lawrence Erlbaum Associates, Inc.
[48] Kuh, G. D. (2003). What we're learning about student engagement from NSSE. Change 35(2):24--32.

Muhammad Pasha received B.Sc. in Computer Science and Engineering in 2010 and M.Sc. in Computer Science and Engineering from Daffodil International University of Dhaka, Bangladesh. He started his research career as a Research Associate in Human Resource Development Institute (HRDI) of Daffodil International University from 2010 to 2011. Later he joined Agami Education Foundation, Bangladesh. Currently, he is working with the Khan Academy Project 2012.

Syed Akhter Hossain was born in Khulna, Bangladesh in 1965. He received his B.Sc. (Hons.) and M.Sc. in Applied Physics and Electronics from Rajshahi University and Ph.D. in Computer Science and Engineering from the University of Dhaka, Bangladesh. He started his teaching career at the Institute Technology Pekerja-Pekerja, Malaysia as a Lecturer in1993. He worked as a Faculty member at Rajshahi University, East West University and ULAB. He did post-doctoral research at IUT Lumiere Lyon 2, France. He is currently serving Daffodil International University as a Professor and Head of the Department of Computer Science and Engineering.

Md Kabirul Islam is an Associate Professor of the Department of Computer Science and Engineering, Daffodil International University, Dhaka. He obtained his PhD in Technology Supported Education from an Australian University. He has several projects and publications related to the different areas of ICT for Development (ICT4D) such as eEducation, mLearning, eHealth, and eCommerce.

Modeling the Number of Children Ever Born in a Household in Bangladesh Using Generalized Poisson Regression

Mariam Begum Ratna, Hossain Ahmed Khan, Md Anower Hossain

Abstract— In this paper, an attempt has been made to model the total number of children ever born in a household in Bangladesh by using a generalized Poisson regression model. The generalized Poisson regression model has statistical advantages over standard Poisson regression model and is suitable for analysis of count data that exhibit either over-dispersion or under-dispersion. The maximum likelihood method is used to estimate the model. Approximate tests are performed for the dispersion and goodness-of-fit measures for comparing alternative models.

Keywords— Generalized Poisson regression model, dispersion, goodness-of-fit.

1 Introduction

When the response or dependent variable is a count generated by processes in which the number of incidences is due to a rare or chance event, and that rare or chance event follows the principle of randomness. In such cases, Poisson regression model is applied to fit this type of data. In theory, data of the Poisson distribution should have its mean equal to its variance. But in practice, data arising from groups or individuals may be statistically dependent, so the observed variance of the data may be larger or smaller than the corresponding mean.

There are number of approaches to dealing with count data, or data arising from accumulated or aggregated binomial (or multinomial) trials. The more familiar is the Poisson regression (PR) model. But the generalized Poisson regression (GPR) model has shown statistical advantages over standard Poisson regression, negative binomial regression, generalized negative binomial regression and generalized linear models in the event of fitting count data that may be over-dispersed or under-dispersed or equi-dispersed. The GPR provides a versatile approach for analyzing count random variables and their relationships to other variables or covariates.

Consul [1] presented pioneering work on a generalization of Poisson distribution. Singh and Femoye [2] used and suggested the GPR model instead of the PR model in their analysis of life table and follow-up data. They suggested that the PR model was not appropriate to analyze an extra-Poisson variation survival data set. A number of works have suggested various models to deal with extra-Poisson variation in data. (See, for example, Cox [3]; Breslow [4]; Lawless [5]).

In many empirical studies of fertility, the number of children ever born in a household in Bangladesh is modeled as a function of socio-economic variables. The commonly used model is the standard Poisson. This model is considered because the number of children ever born in a family is non-negative. However, this model has some restrictions in some situations. In standard Poisson regression model, the conditional mean and variance of the dependent variable is constrained to be equal (equidispersion) for each observation. In practice, this assumption is often violated since the variance can either be larger or smaller than the mean. That is, both over-dispersion and under-dispersion can exist in the count data. If the equidispersion assumption is violated, the estimates in Poisson regression model are still consistent but inefficient. As a result, inference based on the estimated standard errors is no longer valid. As noted in Winkelmann and Zimmermann [6], the number of children ever born in a household often does not follow equal-dispersion assumption when mode is 2. Therefore, the standard Poisson regression model which assumes equal-dispersion is not appropriate to model data about household fertility decision.

The paper proceeds in the following way. Section 2 describes the data and variables used in this paper. Section 3 outlines the generalized Poisson regression model, goodness of fit and comparison measures and test of dispersion. Section 4 presents and discusses the estimated results. The paper concludes in section 5.

- *Mariam Begum Ratna is with School of Business, University of Liberal Arts Bangladesh. Email: mariam.begum@ulab.edu.bd*
- *Hossain Ahmed Khan is with BRAC. E-mail: hossain.ahmed@yahoo.com*
- *Md Anower Hossain is with the Institute of Statistical Research and Training (ISRT), University of Dhaka. E-mail: anower@isrt.ac.bd*

Manuscript received on20 July 2012 and accepted for publication on 30 September 2012.

© 2011 ULAB JSE

2. Data and Variables

The data from Bangladesh Demographic and Health Survey (BDHS) 2007 have been used in this study. The 2007 BDHS employs a nationally representative sample that covers the entire population residing the private dwelling units in Bangladesh. The survey used the sampling frame provided by the list of census enumeration areas (EAs) with population and household information from 2001 Population Census. Bangladesh is divided into six administrative divisions: Barisal, Chittagong, Dhaka, Khulna, Rajshahi and Sylthet. In turn, each division is divided into zillas, and each zilla into upazillas. Rural areas in an upazila are divided into union parishads (UPs), and UPs are further divided into mouzas. Urban areas in an upazila are divided into wards, and wards are subdivided into mahallas. EAs from the census were used as the Primary Sampling Units (PSUs) for the survey. The survey was based on a two-stage stratified sample of households. At the first stage of sampling, 361 PSUs were selected where 227 were rural PSUs and 134 urban PSUs. The survey was designed to obtain 11,485 completed interviews with ever-married women age 10-49. According to the sample design, 4360 interviews were allocated to urban areas and 7125 rural areas.

A household fertility decision may depend on different factors. Following is the list of dependent and independent variables used in this study. Table 1 shows the variable definition and descriptive statistics of each variable.

Dependent variable:

- Number of children ever born in a family

Independent variables:

- Age of respondent
- Has electricity (1 = yes, 0 = no)
- Has Television (1 = yes, 0 = no)
- Age at marriage
- Partner's education level (1 = HSC or more, 0 = otherwise)
- Type of place of residence (1 = Urban, 0 = else)
- Literacy of the respondent (1 = SSC or more, 0 = else)
- Religion of the respondent (1 = Islam, 0 = otherwise)
- Contraceptive use (1 = yes, 0 = no).

3. The Generalized Poission Regression Model

Suppose a count response variable follows a generalized Poisson distribution. To model number of children ever born, we define as the number of children ever born per household. Following Singh and Famoye [2], the probability of mass function is given by

$$f(y_i;\mu_i,\alpha)=\left(\frac{\mu_i}{1+\alpha\mu_i}\right)^{y_i}\frac{(1+\alpha y_i)^{y_i-1}}{y_i!}\times \exp\left(-\frac{\mu_i(1+\alpha y_i)}{1+\alpha\mu_i}\right) \quad (1)$$

$$y_i=0,1,2,.... \qquad \mu_i=\mu_i(x_i)=\exp(x_i\beta)$$

where x_i is a $(k-1)$ dimensional vector of explanatory variables including personal characteristics of both husband and wife in a family as well as some demographic attributes of the family, and β is a k dimensional vector of regression parameters. The mean and variance of Y_i are given by $E(Y_i|x_i)=\mu_i$ and $V(Y_i|x_i)=\mu_i(1+\alpha\mu_i)^2$, respectively.

TABLE 1

VARIABLE DEFINITION AND DESCRIPTIVE STATISTICS (SAMPLE SIZE = 10058)

Variable	Propor-tion of 1's	Mean	Std. Dev. (SD)
Number of children ever born in a family		2.88	2.07
Has electricity	0.526		
Has Television	0.374		
Age at marriage		15.39	2.86
Partner's education level	0.397		
Place of residence	0.379		
Literacy of the respondent	0.667		
Religion of the respondent	0.902		
Contraceptive use	0.521		

The generalized Poisson regression model (1) is a generalization of the standard Poisson regression (PR) model. When $\alpha=0$ the probability mass function in (1) reduces to the PR model and then

$$E(Y_i|x_i)=V(Y_i|x_i),$$

which means equidispersion.

In practical applications, this assumption is often not true since the variance can either be larger or smaller than the mean. If the variance is not equal to the mean, the estimates in PR model are still consistent but not efficient, which lead to the invalidation of inference based on the estimated standard errors.

For $\alpha>0$, $V(Y_i|x_i)>E(Y_i|x_i)$ and the generalized Poisson regression (GPR) model in (1) represents overdispersed count data. For $\alpha<0$, $V(Y_i|x_i)<E(Y_i|x_i)$

and the GPR model in (1) represents under-dispersed count data. In (1), α is called the dispersion parameter and can be estimated simultaneously with the coefficients in the GPR model (1).

To estimate (β, α) in the GPR model (1), we need the log-likelihood function of the GPR model, that is,

$$\ell(\alpha,\beta) = \ln L(\alpha,\beta; y_i) = \sum_{i=1}^{n} y_i \log\left(\frac{\mu_i}{1+\alpha\mu_i}\right) + (y_i - 1)\log(1+\alpha y_i) - \frac{\mu_i(1+\alpha y_i)}{1+\alpha\mu_i} - \log(y_i!)$$

The maximum likelihood equations for estimating α and β are obtained by taking the partial derivatives and equating to zero. Thus we get

$$\frac{\partial \ell(\alpha,\beta)}{\partial \alpha} = \sum_{i=1}^{n}\left\{\frac{-y_i u_i}{1+\alpha\mu_i} + \frac{y_i(y_i-1)}{1+\alpha y_i} - \frac{\mu_i(y_i-\mu_i)}{(1+\alpha\mu_i)^2}\right\} = 0 \quad (2)$$

and

$$\frac{\partial \ell(\alpha,\beta)}{\partial \beta_r} = \sum_{i=1}^{n} \frac{y_i-\mu_i}{\mu_i(1+\alpha\mu_i)^2}\frac{\partial \mu_i}{\partial \beta_r} = 0 ,$$

$r = 1, 2, 3, \ldots, k$

Substituting $\mu_i = \exp(x_i\beta)$, Eq. (2) becomes

$$\frac{\partial \ell(\alpha,\beta)}{\partial \beta_1} = \sum_{i=1}^{n} \frac{y_i-\mu_i}{(1+\alpha\mu_i)^2} = 0 , \quad (3)$$

and

$$\frac{\partial \ell(\alpha,\beta)}{\partial \beta_r} = \sum \frac{(y_i-\mu_i)x_i}{(1+\alpha\mu_i)^2} = 0 , \; r = 2, 3, \ldots, k \quad (4)$$

By using an iterative algorithm equations (2), (3) and (4) are solved simultaneously. The final estimate of β from fitting a Poisson regression model to the data is used as initial estimate of β for the iteration process. The initial estimate of α can be taken as zero or it may be obtained by equating the chi-square statistic to its degrees of freedom. This is given by

$$\sum \frac{(y_i-\mu_i)^2}{V(Y_i|x_i)} = n-k$$

When $\alpha < 0$ (the case of under dispersion), the value of α is such that $1+\alpha\mu_i > 0$ and $1+\alpha y_i > 0$, i.e., $\alpha > \min(-1/\max(\mu_i), -1/\max(y_i))$, as required in equation in (1). An R-program is used to solve Eqs. (2), (3), and (4) simultaneously.

3.1 Goodness-of-fit and model comparison

When more than one regression models are available for a given data set, one can compare performance of alternative models based on some measures of goodness-of-fit. Several measures of goodness-of-fit have been proposed in the literature. One commonly used measure is the Akaike information criterion AIC, which is defined as

$$AIC = -\ell + K$$

where ℓ is the log-likelihood value of the estimated model and K is the number of estimated parameters. The smaller is the AIC, the better is the model.

Merkle and Zimmermann also suggested several Pseudo-R^2 measures. One of these statistics is defined as

$$R_G^2 = \frac{l(\hat{\alpha},\hat{\mu}_i) - l(\hat{\alpha},\bar{y})}{l(\hat{\alpha},y_i) - l(\hat{\alpha},\bar{y})} \quad (5)$$

where

$$l(\hat{\alpha},\hat{\mu}_i) = \sum_{i=1}^{n}\left\{y_i \log\left(\frac{\hat{\mu}_i}{1+\hat{\alpha}\hat{\mu}_i}\right) + (y_i-1)\log(1+\hat{\alpha}y_i) - \frac{\hat{\mu}_i(1+\hat{\alpha}y_i)}{1+\hat{\alpha}\hat{\mu}_i} - \log(y_i!)\right\},$$

$$l(\hat{\alpha},\bar{y}) = \sum_{i=1}^{n}\left\{y_i \log\left(\frac{\bar{y}}{1+\hat{\alpha}\bar{y}}\right) + (y_i-1)\log(1+\hat{\alpha}y_i) - \frac{\bar{y}(1+\hat{\alpha}y_i)}{1+\hat{\alpha}\bar{y}} - \log(y_i!)\right\},$$

$$l(\hat{\alpha}, y_i) = \sum_{i=1}^{n} \left\{ y_i \log\left(\frac{y_i}{1+\hat{\alpha} y_i} \right) + (y_i - 1)\log(1+\hat{\alpha} y_i) - \frac{y_i(1+\hat{\alpha} y_i)}{1+\hat{\alpha} y_i} - \log(y_i!) \right\}$$

$$= \sum_{i=1}^{n} \{ y_i \log(y_i) - \log(1+\hat{\alpha} y_i) - y_i - \log(y_i!) \}$$

R_G^2 measures the explained maximum possible increase in the log-likelihood.

TABLE 2

DETERMINANTS OF HOUSEHOLD FERTILITY: COMPARISON BETWEEN POISSON AND GENERALIZED POISSON REGRESSION MODELS.

1 VARIABLE	POISSON REGRESSION (PR)				GENERALIZED POISSON REGRESSION (GPR)		
	ESTIMATES	STANDARD ERROR (SE)	t – VALUE		ESTIMATES	STANDARD ERROR (SE)	t – VALUE
I…NTERCEPT	0.3364	0.0707	4.76		0.3071	0.0451	6.81
HAS_ELEC	-0.0254	0.0154	-1.65		-0.0391	0.0201	-1.95
HAS_TV	-0.0872	0.0163	-5.35		-0.095	0.0256	-3.71
AGE_MAR	-0.0472	0.0024	-19.67		-0.0534	0.0105	-5.09
PAT_EDU	-0.1167	0.0144	-8.1		-0.1199	0.0195	-6.15
RESI	-0.0655	0.0138	-4.75		-0.0639	0.0215	-2.97
EDU	-0.0723	0.01378	-5.25		-0.0845	0.0159	-5.31
RELIGION	0.1135	0.0213	5.33		0.1096	0.0302	3.63
CON_USE	-0.1466	0.0119	-12.32		-0.1843	0.0185	-9.96
α				0.0627		0.0021	29.85

3.2 Test for Dispersion

The generalized Poisson regression model reduces to the Poisson regression model when the dispersion parameter α equals to zero. To assess justification of using GPR model over the PR model, we test the hypothesis

$$H_0 : \alpha = 0 \quad \text{against } H_1 : \alpha \neq 0 \tag{6}$$

The test of H_0 in (6) is for the significance of the dispersion parameter. Whenever H_0 is rejected, it is recommended to use the GPR model in place of the PR model. To carry out the test in (6), one can use the asymptotically normal Wald type "t" statistic defined as the ratio of the estimate of α to its standard error. Another way to test the null hypothesis of α equals to zero is to use the likelihood ratio statistic, which is approximately chi-square distribution with one degree of freedom when the null hypothesis is true. Both the likelihood ratio test and the Wald type "t" test are asymptotically equivalent.

4. RESULTS AND DISCUSSION

Both Poisson regression (PR) and generalized Poisson regression (GPR) models are estimated using sample data. Table 2 represents the parameter estimates, their standard errors, and t-value. Table 3 presents several measures of goodness-of-fit including Pearson's chi-square, deviance, AIC and R_G^2.

TABLE 3:

GOODNESS-OF-FIT TEST MEASURE

GOODNESS-OF-FIT MEASURES	PR	GPR
PEARSON'S CHI-SQUARE	7486.13	7571.00
DEVIANCE	72935.10	13493.69
AIC	25988.93	17929.04
R_G^2	0.3079	0.4608

We note from table 2 that the estimate of dispersion parameter using GPR model is positive indicating over-dispersion. The asymptotic t-statistics for testing the null hypothesis $H_0 : \alpha = 0$ is significant ($t-$value = 29.85). The dispersion parameter α is significantly different from zero. So the PR model is not appropriate for this data since we reject the null hypothesis $H_0 : \alpha = 0$. From table 3, the generalized Poisson regression model is preferred to the Poisson regression model based on all four goodness-of-fit measures: Pearson's chi-square, deviance, AIC and R_G^2. For example, the generalized Poisson regression model has a smaller deviance value (13493.69) than the deviance value (72935.10) of the standard Poisson regression model. The value of Pearson's chi-square is 7571.00 for generalized Poisson regression model, whereas it is 7486.13 for the Poisson model, which indicates that modeling over-dispersion data using the GPR is more appropriate than the PR model.

The parameter estimates are almost similar for both Poisson regression and GPR models. This is expected since estimates from both models are consistent. The results from table 2 show that the standard errors of estimates from PR model are under estimated because the PR model does not consider the over-dispersion exhibited by the data. In this case the standard errors of the estimates from GPR are more accurate since it considers the over-dispersion showed by the data. Therefore, the t-statistic for testing the significance of the parameter estimates is upward biased for Poisson regression model.

From the results in table 2, the coefficient of partner's education and respondent education are negative and significant. These imply that households with educated parents have fewer children. Also the explanatory variables have electricity and TVs are significant and are inversely related to the family size. This is expected because households are aware about the problem of more children through the different TV programs about population problem.

The effect of place of residence (1 = Urban, 0 = else) on family size is negative and significant. The urban people prefer less number of children in the family. The variable Religion (1 = Islam, 0 = otherwise) has positive effect on family fertility decision and statistically significant. Contraceptive use (1 = yes, 0 = no) has negative effect on number of children in a family and us significant. The variable age at first marriage has negative coefficient in the fitted model which implies that the number of children in a family decreases as the value of age at first marriage increases.

5. Summary

In this paper, we have described nonlinear regression techniques (namely, generalized Poisson regression and Standard Poisson regression) appropriate for the analysis of number of children in a household of Bangladesh. It has been shown that when over-dispersion exists in the data generalized Poisson regression model gives better fits than standard Poisson regression model. Several goodness-of-fit techniques and asymptotic t-test for over-dispersion imply that the generalized Poisson regression model is more appropriate for the data about the number of children in a household for Bangladesh.

References

[1] P. C. Consul, Generalized Poisson distribution: Properties and applications, Dekker, Inc., New York, 1989.

[2] Singh and F. Famoye Restricted generalized Poisson regression model. *Communications in* regression, *Canadian Journal of Statistics*, 1993, vol 15, pp 209-225.

[3] D. R. Cox, Some remarks on over-dispersion. Biometrica, 1983, vol 70, pp 269-272.

[4] N. Breslow, Tests of hypothesis in over-dispersed Poisson regression and other quasi-likelihood models. *Journal of the American Statistical Association,* 1990, vol 85, pp 565-571.

[5] J. F. Lawless, Negative binomial and mixed Poisson regression, Canadian Journal of Statistics, 1987, vol 15, pp 209-225.

[6] R. Winkelmann and K. F. Zimmermann, Count data models for demographic data. *Mathematical population Studies*, 1994, vol 4, pp 205-221.

Mariam Begum Ratna was born in Noakhali, Bangladesh in 1981. She completed her B. Sc. (Hons.) and M. S. in Applied Statistics from Institute of Statistical Research and Training (ISRT), University of Dhaka, in 2002 and 2003, respectively. Currently she is working as a Lecturer of Statistics in ULAB. Before that she worked as a Lecturer of Statistics in American International University and Stamford University Bangladesh.

Hossain Ahmed Khan completed his B. Sc. (Hons.) and M. S. in Applied Statistics from Institute of Statistical Research and Training (ISRT), University of Dhaka, in 2006 and 2007, respectively. Currently he is working as a researcher in BRAC.

Md Anower Hossain was born in Comilla, Bangladesh in 1980. He did his B. Sc. (Hons.) and M. S. in Applied Statistics from Institute of Statistical Research and Training (ISRT), University of Dhaka, in 2002 and 2003, respectively. He joined as a Lecturer of Applied Statistics at ISRT in 2007 and currently he is an Assistant Professor of this institute.

Modeling the Number of Children Ever Born in a Household in Bangladesh Using Generalized Poisson Regression

Mariam Begum Ratna, Hossain Ahmed Khan, Md Anower Hossain

Abstract— In this paper, an attempt has been made to model the total number of children ever born in a household in Bangladesh by using a generalized Poisson regression model. The generalized Poisson regression model has statistical advantages over standard Poisson regression model and is suitable for analysis of count data that exhibit either over-dispersion or under-dispersion. The maximum likelihood method is used to estimate the model. Approximate tests are performed for the dispersion and goodness-of-fit measures for comparing alternative models.

Keywords— Generalized Poisson regression model, dispersion, goodness-of-fit.

1 Introduction

When the response or dependent variable is a count generated by processes in which the number of incidences is due to a rare or chance event, and that rare or chance event follows the principle of randomness. In such cases, Poisson regression model is applied to fit this type of data. In theory, data of the Poisson distribution should have its mean equal to its variance. But in practice, data arising from groups or individuals may be statistically dependent, so the observed variance of the data may be larger or smaller than the corresponding mean.

There are number of approaches to dealing with count data, or data arising from accumulated or aggregated binomial (or multinomial) trials. The more familiar is the Poisson regression (PR) model. But the generalized Poisson regression (GPR) model has shown statistical advantages over standard Poisson regression, negative binomial regression, generalized negative binomial regression and generalized linear models in the event of fitting count data that may be over-dispersed or under-dispersed or equi-dispersed. The GPR provides a versatile approach for analyzing count random variables and their relationships to other variables or covariates.

Consul [1] presented pioneering work on a generalization of Poisson distribution. Singh and Femoye [2] used and suggested the GPR model instead of the PR model in their analysis of life table and follow-up data. They suggested that the PR model was not appropriate to analyze an extra-Poisson variation survival data set. A number of works have suggested various models to deal with extra-Poisson variation in data. (See, for example, Cox [3]; Breslow [4]; Lawless [5]).

In many empirical studies of fertility, the number of children ever born in a household in Bangladesh is modeled as a function of socio-economic variables. The commonly used model is the standard Poisson. This model is considered because the number of children ever born in a family is non-negative. However, this model has some restrictions in some situations. In standard Poisson regression model, the conditional mean and variance of the dependent variable is constrained to be equal (equidispersion) for each observation. In practice, this assumption is often violated since the variance can either be larger or smaller than the mean. That is, both over-dispersion and under-dispersion can exist in the count data. If the equidispersion assumption is violated, the estimates in Poisson regression model are still consistent but inefficient. As a result, inference based on the estimated standard errors is no longer valid. As noted in Winkelmann and Zimmermann [6], the number of children ever born in a household often does not follow equal-dispersion assumption when mode is 2. Therefore, the standard Poisson regression model which assumes equal-dispersion is not appropriate to model data about household fertility decision.

The paper proceeds in the following way. Section 2 describes the data and variables used in this paper. Section 3 outlines the generalized Poisson regression model, goodness of fit and comparison measures and test of dispersion. Section 4 presents and discusses the estimated results. The paper concludes in section 5.

- *Mariam Begum Ratna is with School of Business, University of Liberal Arts Bangladesh. Email: mariam.begum@ulab.edu.bd*
- *Hossain Ahmed Khan is with BRAC. E-mail: hossain.ahmed@yahoo.com*
- *Md Anower Hossain is with the Institute of Statistical Research and Training (ISRT), University of Dhaka. E-mail: anower@isrt.ac.bd*

Manuscript received on20 July 2012 and accepted for publication on 30 September 2012.

© 2011 ULAB JSE

2. Data and Variables

The data from Bangladesh Demographic and Health Survey (BDHS) 2007 have been used in this study. The 2007 BDHS employs a nationally representative sample that covers the entire population residing the private dwelling units in Bangladesh. The survey used the sampling frame provided by the list of census enumeration areas (EAs) with population and household information from 2001 Population Census. Bangladesh is divided into six administrative divisions: Barisal, Chittagong, Dhaka, Khulna, Rajshahi and Sylthet. In turn, each division is divided into zillas, and each zilla into upazillas. Rural areas in an upazila are divided into union parishads (UPs), and UPs are further divided into mouzas. Urban areas in an upazila are divided into wards, and wards are subdivided into mahallas. EAs from the census were used as the Primary Sampling Units (PSUs) for the survey. The survey was based on a two-stage stratified sample of households. At the first stage of sampling, 361 PSUs were selected where 227 were rural PSUs and 134 urban PSUs. The survey was designed to obtain 11,485 completed interviews with ever-married women age 10-49. According to the sample design, 4360 interviews were allocated to urban areas and 7125 rural areas.

A household fertility decision may depend on different factors. Following is the list of dependent and independent variables used in this study. Table 1 shows the variable definition and descriptive statistics of each variable.

Dependent variable:

- Number of children ever born in a family

Independent variables:

- Age of respondent
- Has electricity (1 = yes, 0 = no)
- Has Television (1 = yes, 0 = no)
- Age at marriage
- Partner's education level (1 = HSC or more, 0 = otherwise)
- Type of place of residence (1 = Urban, 0 = else)
- Literacy of the respondent (1 = SSC or more, 0 = else)
- Religion of the respondent (1 = Islam, 0 = otherwise)
- Contraceptive use (1 = yes, 0 = no).

3. The Generalized Poission Regression Model

Suppose a count response variable follows a generalized Poisson distribution. To model number of children ever born, we define as the number of children ever born per household. Following Singh and Famoye [2], the probability of mass function is given by

$$f(y_i;\mu_i,\alpha)=\left(\frac{\mu_i}{1+\alpha\mu_i}\right)^{y_i}\frac{(1+\alpha y_i)^{y_i-1}}{y_i!}\times \exp\left(-\frac{\mu_i(1+\alpha y_i)}{1+\alpha\mu_i}\right) \quad (1)$$

$$y_i=0,1,2,.... \qquad \mu_i=\mu_i(x_i)=\exp(x_i\beta)$$

where x_i is a $(k-1)$ dimensional vector of explanatory variables including personal characteristics of both husband and wife in a family as well as some demographic attributes of the family, and β is a k dimensional vector of regression parameters. The mean and variance of Y_i are given by $E(Y_i|x_i)=\mu_i$ and $V(Y_i|x_i)=\mu_i(1+\alpha\mu_i)^2$, respectively.

TABLE 1

VARIABLE DEFINITION AND DESCRIPTIVE STATISTICS (SAMPLE SIZE = 10058)

Variable	Propor-tion of 1's	Mean	Std. Dev. (SD)
Number of children ever born in a family		2.88	2.07
Has electricity	0.526		
Has Television	0.374		
Age at marriage		15.39	2.86
Partner's education level	0.397		
Place of residence	0.379		
Literacy of the respondent	0.667		
Religion of the respondent	0.902		
Contraceptive use	0.521		

The generalized Poisson regression model (1) is a generalization of the standard Poisson regression (PR) model. When $\alpha=0$ the probability mass function in (1) reduces to the PR model and then

$$E(Y_i|x_i)=V(Y_i|x_i),$$

which means equidispersion.

In practical applications, this assumption is often not true since the variance can either be larger or smaller than the mean. If the variance is not equal to the mean, the estimates in PR model are still consistent but not efficient, which lead to the invalidation of inference based on the estimated standard errors.

For $\alpha>0$, $V(Y_i|x_i)>E(Y_i|x_i)$ and the generalized Poisson regression (GPR) model in (1) represents overdispersed count data. For $\alpha<0$, $V(Y_i|x_i)<E(Y_i|x_i)$

and the GPR model in (1) represents under-dispersed count data. In (1), α is called the dispersion parameter and can be estimated simultaneously with the coefficients in the GPR model (1).

To estimate (β, α) in the GPR model (1), we need the log-likelihood function of the GPR model, that is,

$$\ell(\alpha,\beta) = \ln L(\alpha,\beta; y_i) = \sum_{i=1}^{n} y_i \log\left(\frac{\mu_i}{1+\alpha\mu_i}\right) + (y_i - 1)\log(1+\alpha y_i) - \frac{\mu_i(1+\alpha y_i)}{1+\alpha\mu_i} - \log(y_i!)$$

The maximum likelihood equations for estimating α and β are obtained by taking the partial derivatives and equating to zero. Thus we get

$$\frac{\partial \ell(\alpha,\beta)}{\partial \alpha} = \sum_{i=1}^{n}\left\{\frac{-y_i u_i}{1+\alpha\mu_i} + \frac{y_i(y_i-1)}{1+\alpha y_i} - \frac{\mu_i(y_i-\mu_i)}{(1+\alpha\mu_i)^2}\right\} = 0 \quad (2)$$

and

$$\frac{\partial \ell(\alpha,\beta)}{\partial \beta_r} = \sum_{i=1}^{n} \frac{y_i-\mu_i}{\mu_i(1+\alpha\mu_i)^2}\frac{\partial \mu_i}{\partial \beta_r} = 0 ,$$

$r = 1, 2, 3, \ldots, k$

Substituting $\mu_i = \exp(x_i\beta)$, Eq. (2) becomes

$$\frac{\partial \ell(\alpha,\beta)}{\partial \beta_1} = \sum_{i=1}^{n} \frac{y_i-\mu_i}{(1+\alpha\mu_i)^2} = 0 , \quad (3)$$

and

$$\frac{\partial \ell(\alpha,\beta)}{\partial \beta_r} = \sum \frac{(y_i-\mu_i)x_i}{(1+\alpha\mu_i)^2} = 0 , \; r = 2, 3, \ldots, k \quad (4)$$

By using an iterative algorithm equations (2), (3) and (4) are solved simultaneously. The final estimate of β from fitting a Poisson regression model to the data is used as initial estimate of β for the iteration process. The initial estimate of α can be taken as zero or it may be obtained by equating the chi-square statistic to its degrees of freedom. This is given by

$$\sum \frac{(y_i-\mu_i)^2}{V(Y_i|x_i)} = n-k$$

When $\alpha < 0$ (the case of under dispersion), the value of α is such that $1+\alpha\mu_i > 0$ and $1+\alpha y_i > 0$, i.e., $\alpha > \min(-1/\max(\mu_i), -1/\max(y_i))$, as required in equation in (1). An R-program is used to solve Eqs. (2), (3), and (4) simultaneously.

3.1 Goodness-of-fit and model comparison

When more than one regression models are available for a given data set, one can compare performance of alternative models based on some measures of goodness-of-fit. Several measures of goodness-of-fit have been proposed in the literature. One commonly used measure is the Akaike information criterion AIC, which is defined as

$$AIC = -\ell + K$$

where ℓ is the log-likelihood value of the estimated model and K is the number of estimated parameters. The smaller is the AIC, the better is the model.

Merkle and Zimmermann also suggested several Pseudo-R^2 measures. One of these statistics is defined as

$$R_G^2 = \frac{l(\hat{\alpha},\hat{\mu}_i) - l(\hat{\alpha},\bar{y})}{l(\hat{\alpha},y_i) - l(\hat{\alpha},\bar{y})} \quad (5)$$

where

$$l(\hat{\alpha},\hat{\mu}_i) = \sum_{i=1}^{n}\left\{y_i \log\left(\frac{\hat{\mu}_i}{1+\hat{\alpha}\hat{\mu}_i}\right) + (y_i-1)\log(1+\hat{\alpha}y_i) - \frac{\hat{\mu}_i(1+\hat{\alpha}y_i)}{1+\hat{\alpha}\hat{\mu}_i} - \log(y_i!)\right\},$$

$$l(\hat{\alpha},\bar{y}) = \sum_{i=1}^{n}\left\{y_i \log\left(\frac{\bar{y}}{1+\hat{\alpha}\bar{y}}\right) + (y_i-1)\log(1+\hat{\alpha}y_i) - \frac{\bar{y}(1+\hat{\alpha}y_i)}{1+\hat{\alpha}\bar{y}} - \log(y_i!)\right\},$$

$$l(\hat{\alpha}, y_i) = \sum_{i=1}^{n} \left\{ y_i \log\left(\frac{y_i}{1+\hat{\alpha} y_i} \right) + (y_i - 1)\log(1+\hat{\alpha} y_i) - \frac{y_i(1+\hat{\alpha} y_i)}{1+\hat{\alpha} y_i} - \log(y_i!) \right\}$$

$$= \sum_{i=1}^{n} \{ y_i \log(y_i) - \log(1+\hat{\alpha} y_i) - y_i - \log(y_i!) \}$$

R_G^2 measures the explained maximum possible increase in the log-likelihood.

TABLE 2

DETERMINANTS OF HOUSEHOLD FERTILITY: COMPARISON BETWEEN POISSON AND GENERALIZED POISSON REGRESSION MODELS.

1 VARIABLE	POISSON REGRESSION (PR)				GENERALIZED POISSON REGRESSION (GPR)		
	ESTIMATES	STANDARD ERROR (SE)	t – VALUE		ESTIMATES	STANDARD ERROR (SE)	t – VALUE
I…NTERCEPT	0.3364	0.0707	4.76		0.3071	0.0451	6.81
HAS_ELEC	-0.0254	0.0154	-1.65		-0.0391	0.0201	-1.95
HAS_TV	-0.0872	0.0163	-5.35		-0.095	0.0256	-3.71
AGE_MAR	-0.0472	0.0024	-19.67		-0.0534	0.0105	-5.09
PAT_EDU	-0.1167	0.0144	-8.1		-0.1199	0.0195	-6.15
RESI	-0.0655	0.0138	-4.75		-0.0639	0.0215	-2.97
EDU	-0.0723	0.01378	-5.25		-0.0845	0.0159	-5.31
RELIGION	0.1135	0.0213	5.33		0.1096	0.0302	3.63
CON_USE	-0.1466	0.0119	-12.32		-0.1843	0.0185	-9.96
α				0.0627		0.0021	29.85

3.2 Test for Dispersion

The generalized Poisson regression model reduces to the Poisson regression model when the dispersion parameter α equals to zero. To assess justification of using GPR model over the PR model, we test the hypothesis

$$H_0 : \alpha = 0 \quad \text{against } H_1 : \alpha \neq 0 \tag{6}$$

The test of H_0 in (6) is for the significance of the dispersion parameter. Whenever H_0 is rejected, it is recommended to use the GPR model in place of the PR model. To carry out the test in (6), one can use the asymptotically normal Wald type "t" statistic defined as the ratio of the estimate of α to its standard error. Another way to test the null hypothesis of α equals to zero is to use the likelihood ratio statistic, which is approximately chi-square distribution with one degree of freedom when the null hypothesis is true. Both the likelihood ratio test and the Wald type "t" test are asymptotically equivalent.

4. RESULTS AND DISCUSSION

Both Poisson regression (PR) and generalized Poisson regression (GPR) models are estimated using sample data. Table 2 represents the parameter estimates, their standard errors, and t-value. Table 3 presents several measures of goodness-of-fit including Pearson's chi-square, deviance, AIC and R_G^2.

TABLE 3:

GOODNESS-OF-FIT TEST MEASURE

GOODNESS-OF-FIT MEASURES	PR	GPR
PEARSON'S CHI-SQUARE	7486.13	7571.00
DEVIANCE	72935.10	13493.69
AIC	25988.93	17929.04
R_G^2	0.3079	0.4608

We note from table 2 that the estimate of dispersion parameter using GPR model is positive indicating over-dispersion. The asymptotic t-statistics for testing the null hypothesis $H_0 : \alpha = 0$ is significant ($t-$value = 29.85). The dispersion parameter α is significantly different from zero. So the PR model is not appropriate for this data since we reject the null hypothesis $H_0 : \alpha = 0$. From table 3, the generalized Poisson regression model is preferred to the Poisson regression model based on all four goodness-of-fit measures: Pearson's chi-square, deviance, AIC and R_G^2. For example, the generalized Poisson regression model has a smaller deviance value (13493.69) than the deviance value (72935.10) of the standard Poisson regression model. The value of Pearson's chi-square is 7571.00 for generalized Poisson regression model, whereas it is 7486.13 for the Poisson model, which indicates that modeling over-dispersion data using the GPR is more appropriate than the PR model.

The parameter estimates are almost similar for both Poisson regression and GPR models. This is expected since estimates from both models are consistent. The results from table 2 show that the standard errors of estimates from PR model are under estimated because the PR model does not consider the over-dispersion exhibited by the data. In this case the standard errors of the estimates from GPR are more accurate since it considers the over-dispersion showed by the data. Therefore, the t-statistic for testing the significance of the parameter estimates is upward biased for Poisson regression model.

From the results in table 2, the coefficient of partner's education and respondent education are negative and significant. These imply that households with educated parents have fewer children. Also the explanatory variables have electricity and TVs are significant and are inversely related to the family size. This is expected because households are aware about the problem of more children through the different TV programs about population problem.

The effect of place of residence (1 = Urban, 0 = else) on family size is negative and significant. The urban people prefer less number of children in the family. The variable Religion (1 = Islam, 0 = otherwise) has positive effect on family fertility decision and statistically significant. Contraceptive use (1 = yes, 0 = no) has negative effect on number of children in a family and us significant. The variable age at first marriage has negative coefficient in the fitted model which implies that the number of children in a family decreases as the value of age at first marriage increases.

5. Summary

In this paper, we have described nonlinear regression techniques (namely, generalized Poisson regression and Standard Poisson regression) appropriate for the analysis of number of children in a household of Bangladesh. It has been shown that when over-dispersion exists in the data generalized Poisson regression model gives better fits than standard Poisson regression model. Several goodness-of-fit techniques and asymptotic t-test for over-dispersion imply that the generalized Poisson regression model is more appropriate for the data about the number of children in a household for Bangladesh.

References

[1] P. C. Consul, Generalized Poisson distribution: Properties and applications, Dekker, Inc., New York, 1989.

[2] Singh and F. Famoye Restricted generalized Poisson regression model. *Communications in* regression, *Canadian Journal of Statistics*, 1993, vol 15, pp 209-225.

[3] D. R. Cox, Some remarks on over-dispersion. Biometrica, 1983, vol 70, pp 269-272.

[4] N. Breslow, Tests of hypothesis in over-dispersed Poisson regression and other quasi-likelihood models. *Journal of the American Statistical Association,* 1990, vol 85, pp 565-571.

[5] J. F. Lawless, Negative binomial and mixed Poisson regression, Canadian Journal of Statistics, 1987, vol 15, pp 209-225.

[6] R. Winkelmann and K. F. Zimmermann, Count data models for demographic data. *Mathematical population Studies*, 1994, vol 4, pp 205-221.

Mariam Begum Ratna was born in Noakhali, Bangladesh in 1981. She completed her B. Sc. (Hons.) and M. S. in Applied Statistics from Institute of Statistical Research and Training (ISRT), University of Dhaka, in 2002 and 2003, respectively. Currently she is working as a Lecturer of Statistics in ULAB. Before that she worked as a Lecturer of Statistics in American International University and Stamford University Bangladesh.

Hossain Ahmed Khan completed his B. Sc. (Hons.) and M. S. in Applied Statistics from Institute of Statistical Research and Training (ISRT), University of Dhaka, in 2006 and 2007, respectively. Currently he is working as a researcher in BRAC.

Md Anower Hossain was born in Comilla, Bangladesh in 1980. He did his B. Sc. (Hons.) and M. S. in Applied Statistics from Institute of Statistical Research and Training (ISRT), University of Dhaka, in 2002 and 2003, respectively. He joined as a Lecturer of Applied Statistics at ISRT in 2007 and currently he is an Assistant Professor of this institute.