ULAB JOURNAL OF SCIENCE AND ENGINEERING

A RESEARCH PUBLICATION OF ULAB

November 2014 Vol.5 ISSN: 2079-4398

CONTENTS

Editorial 1

A Cost Effective Inter Network Handoff Process 2
Nusrat Jahan Farin, Mahmudul Faisal Al Ameen

Emerging Technologies in Business Intelligence and Advanced Analytics 7
Nayem Rahman, Dale Rutz, Shameem Akhter, and Fahad Aldhaban

Poor Academic Achievement of University Students: Problems and Solutions 18
Md Kabirul Islam, Yousuf M. Islam, Mohammed Shamsul Hoque

An Efficient Modification to Playfair Cipher 26
Md. Ahnaf Tahmid Shakil and Md. Rabiul Islam

Design and Implementation of Microcontroller Based Digital Soil pH Meter 31
M.A. A. Mashud, M. H. Uddin and Md. Serajul Islam

(Contents Continued on Back Cover)

School of Science & Engineering
UNIVERSITY OF LIBERAL ARTS
BANGLADESH

ULAB JOURNAL OF SCIENCE AND ENGINEERING

Vol. 5, November 2014

(Contents Continued from Front Cover)

A Note for Contributors 36

Copyright Form 37

ULAB
UNIVERSITY OF LIBERAL ARTS BANGLADESH

House 56, Rd 4/A @ Satmasjid Road Dhanmondi, Dhaka-1209, Bangladesh
Phone: 966-1255, 966-1301, 0171-309-1936. Web: www.ulab.edu.bd

Editorial
Vol. 5, 2014

WE are pleased to present the fifth volume of the ULAB's Journal of Science and Engineering (JSE). It's been another successful year for us. Since 2010, ULAB's JSE has maintained its position as the most prestigious national publication in the field of science and engineering. We feel proud that the journal has crossed the national boundary and becomes international. Now we are getting papers from abroad.

In 2010 (first volume), 28 papers were submitted for publication, with 10 being accepted (acceptance rate: 35.71%). In 2011 (second volume), submissions increased to 30 and after peer review 10 papers were being accepted (acceptance rate: 33.33%). In 2012 (third volume) 17 (including 1 from UK) papers were submitted for publication, with 9 being accepted (acceptance rate: 52.94%). In 2013 (fourth volume) 16 submissions (including 3 from India and 1 from South Korea) and after peer-review 8 are being accepted (acceptance rate: 50.00%). In the first volume, we found many ordinary papers were being submitted, but the quality of submitted paper is gradually improving in the subsequent volumes. This year we have received 10 submissions (including 1 from USA) and after peer-review 5 are being accepted (acceptance rate: 50.00%).

According to the publication policy all papers submitted to this journal have been subject to a rigorous peer-review. We continuously strive to publish original research that contains elements with technical novelty in a timely manner. The journal's focus is on traditional areas of both theoretical and practical applications of physics, mathematics, statistics, environmental science, electronics, computer science, information and communication engineering. In addition, we shall gladly accept submissions on emerging technologies and other emerging areas related to the above fields.

You are most welcome to read this issue of the ULAB Journal of Science and Engineering. In order to continue publishing a high-quality journal, JSE's editorial board seeks excellent contributions containing original research or reviews. Our editorial board works tirelessly to provide contributors with a prompt and thorough review process.

We would like to extend our heartfelt thanks to every author, reviewer and reader for your support and dedication to JSE. We strongly believe that together, we shall elevate the journal to even higher levels of quality, impact, and reputation.

Mohammad Shorif Uddin
Editor-in-Chief

Rezaul Karim Mazumder
Editor

Sazzad Hossain
Editor

An Efficient Technique for Inter/Intra Network Handover Process

Nusrat Jahan Farin[1] and Mahmudul Faisal Al Ameen[2]
Department of Computer Science and Engineering,
University of Liberal Arts Bangladesh, Dhanmondi, Dhaka, Bangladesh.
E-mail: nusrat.farin.cse@ulab.edu.bd[1], muhmudulfaisal@gmail.com[2]

Abstract— In a telecommunication system, run of prepaid mobile balance and degraded signal strength are two important reasons for the disruption of mobile conversation besides other reasons. Presence of multiple Subscriber Identification Module (SIM) cards in the mobile handset can facilitate us to avoid disruption partially that improve the overall call quality. In our work, we proposed a novel handover technique that uses multiple SIM to avoid such disruptions. Our work shows a guideline of necessary network operations that should be performed at the telecommunication switching centers to establish an inter/intra network handover.

Keywords — Inter/Intra System Handover, Mobile Telecommunication, Call Quality, Signal Strength.

© University of Liberal Arts Bangladesh
All rights reserved.

Manuscript received on 19 September 2014 and accepted for publication on 31 October 2014.

1 Introduction

Now-a-days mobile phone becomes very popular. It is more popular than the fixed line telephone because of its mobility and access of network at fair rate without any cable. There are usually two kinds of billing system the telecommunication mobile companies offer - postpaid and prepaid system. Although postpaid mobile is more popular than the prepaid mobile in most of the countries, in some third world countries like Bangladesh, Prepaid system becomes popular among general people and telecommunication companies earn a large revenue from the postpaid packages. Although for a typical user in these countries prepaid system can be more comfortable, but a major disadvantage of it is the disruption of a conversation due to the run of the mobile balance. This is one of the specific problem our work is intended to solve.

In cellular communication system, the physical mobile devices are equipped with Subscriber Identity Modules *(SIM)* card. It holds the necessary information of the operator that enables the device to communicate to the cellular operator. A multi-SIM mobile phone is one which holds two or more SIM cards. Since dual-SIM handsets are major among them, we generally call a multi-SIM mobile phone a dual-SIM phone that is more intuitive for present days. Dual-SIM mobile phones are available since 2000 [18]. A mobile device that holds more than two SIM card are also available [16], [17]. In many countries, a lot of mobile users use dual-SIM mobile phone. Day by day, number of dual-SIM activated mobile users are increasing rapidly because of different levels of unique tariffs and facilities offered by the different mobile communication vendors [13] . It negates the need for having two or more separate devices with SIM cards of different operators. Dual-SIM phones are very popular in developing countries mostly in Southeast Asia and Indian subcontinent.

Multiple SIM cards are being used by 71 million subscribers across India according to a study by Nielsen in 2012. They also found that 75 percent of the Multi-SIM card users intended to buy a dual-SIM card handset and 4 out of every 5 Multi SIM card users own a single handset [13]. As of Q1 and Q2, 2013, around 44.9 and 50.8 million respectively dual-SIM handsets were sold in India [14]. Strategy Analytics forecasts on dual-SIM handset penetration to reach 20% worldwide by 2016 [15]. Samsung has dual SIM versions of many devices in their offering. Research shows that some devices enjoyed a great success in sales due to its dual SIM compatibility feature despite of being exceptionally poor in performance [14]. Dual-SIM phones also allow for easier roaming by being able to access a foreign network while keeping existing local card.

Dual-SIM phone devices are equipped with two transceivers. They are capable of receiving calls on both SIM cards unless one is being used for a conversation. In this paper, we will call a *SIM* active *SIM* on which a conversation is being taken place and the other *SIMs* passive SIMs which are ready for carrying a conversation. Although existence of multiple SIM cards naturalizes several advantages to the user, it cannot help switching between SIM cards when an active conversation is being interrupted due to the expiration or run out of mobile balance. Again, during a conversation, when network signal of the active operator is weakened enough to drop the call, despite of the presence of SIM of another (passive) operator there is no way to transfer the call from the active operator to the passive one. In this work, we will try to find a solution to continue an ongoing communication in that circumstances through an

alternative SIM card (i.e. alternative vendors).

This paper is embodied as follows. We will explain our motivation in Section II. Next, we will describe the related works in Section III and it will be followed by our proposed solution, Section IV demonstrates the handover process architecture. Limitation of the work is given in Section V. Finally the paper is concluded in Section VI.

2 Motivation

Avoidance of disruption of ongoing communication is very important to a telecommunication system. It can also be taken as a quality measuring criteria of communication system. In cellular telecommunication system, handover is one of the most important processes so that the conversation can be continued in difficult situation by transferring it from one channel connected to the core network to another channel. Although simple handover works fine in some situations, it cannot help in many other situations.

In a prepaid mobile system, a user needs to buy a finite amount of balance. For different facilities used by the user, the provider deducts certain amount of balance from the user's account. It is often happen that an ongoing call is disconnected only due to the run out of the balance of the caller. That is why the fluency and flow of the conversation may fall. To avoid such a disruption, the operator may provide loan of additional balance that can in turn be used up before the conversation is finished. Naturally a user needs to buy the balance again to continue the conversation that cannot be easily possible without being disconnected.

A single SIM mobile handset user may not have any easy way to avoid such a circumstances. But a multi-SIM handset user usually re-establishes the call by calling through the other SIM. Still, this process is manual and it needs to disconnect the active connection and it is followed by reconnection by the other (*passive*) communication channel.

Sometimes another situation can also arise. For a mobile caller, if the condition of the atmosphere affects and degrades its active communications, the call quality can be improved by handing it over to the passive SIM.

Usually a SIM card is associated to a user in a telecommunication network system. When a single user uses a multi-SIM handset and it holds more than one active SIM cards, it would be best to automate the transfer of the conversation from the active SIM to passive SIM.

The main motivation of the work is to take advantages of multi-SIM mobile handsets to improve call quality. It is done by automating handover process in network level as well as at the handsets level.

3 Related Works

As If there is no disruption, mobile communication is much more efficient than the fixed line communication to the mobile users. However, there are many unwanted disturbance occurs during a conversation which may not be avoided because of lack of technologies. Mobile telecommunication conversation can be dropped for the several reasons. When a calling mobile host *(MH)* is not be fixed, it may move from one cell to another cell of the network. In the moving time from one cell to another one, handover in same network is necessary to avoid call drop that is introduced by [7], [8].

In the *GSM* or cellular communication system handover is controlled by the *BSC*. Handover can be initiated by the network depending on the quality of the signaling strength of the Mobile Switching Center *MSC* and the new and old *BSC*. When a Mobile Station *(MS)* first establishes connection with the *BSC*, the *MS* may send a message to the base station to confirm its capabilities so as to allow the system to properly accommodate the *MS*. In *GSM* network, the message is sent to *MSC* when the information is needed. Billing System (BS) (referred as Billing Gateway or BGW in some literature) is responsible for calculation bill run-time.

Inter-system handover [4], [3] is a special technique that happens between different networks. It is needed when the handset is out of one network cell but inside a cell of different network. When a new network is being introduced it can take some time to install all the base stations and associated apparatus. For that, there is a delay before the new network provides the full geographical coverage. If the new network does not provide the full coverage, the customer will be dissatisfied by its coverage to the old network. The cost of the new network is high and no return can be gained from it until it is in use. A method has been proposed to tackle this problem by allowing mobile station using the new network to be handed over the calls to the old network when they move outside the coverage of the new network. This is known as Inter-system handover [4].

Along with the handover system management there are several kinds of technologies exist to solve the partial problems of the network as like Dynamic Buffering Control Scheme [12], Handover Management for Mobile Nodes in IPv6 Networks, Handover Process [10], Handover Management Architectures [11], Inter system handover [4] etc. But the cost of the technologies is little bit high. Because an operator used to charge high to another operator when a call of the second one uses resources of the first one.

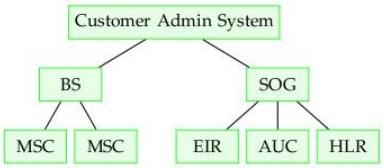

Figure 1: Relation of the BS (or BGW) with the SOG.

So, to reduce the cost, a method is proposed in this paper. When the first network does not have the full coverage, we propose to establish a second call using passive SIM of its own operator so that the operator can think it as its own call.

The proposed method in this study is needed when the

balance is finished during the conversation time. It is basically a different version of inter-system handover for completely different purposes.

Several procedures take place to setup a call. If anyone wants to setup a call, the network maintain such kind of system as the bill must be checked by Real-time charging

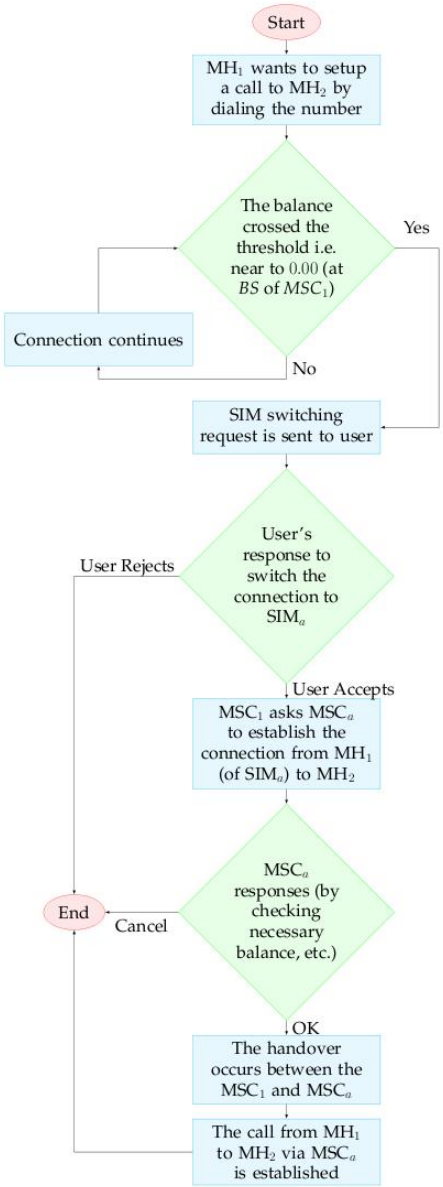

Figure 2: The flow chart of soft handover process when balance is near to be finished.

of Billing System *(BS),* the Home Location Register *(HLR)*, the Authentication Center (*AUC)* and the Equipment Identity Register *(EIR)* must be checked by the Service Order Gate Way (*SOG)*. In figure **1** the billing system and the checker of the *HLR* are shown how they are connected [5]. In this study the presented proposal must reduce the cost of the re-setup call and also reduce the delay time.

4 Handover Process Architecture

If the balance is gone to run out, or the time of weaker signal strength, it is very important to handover with the alternative *SIM* to continue to keep the fluency of the conversation. According to the aspect of the presented process architecture, a method/rule is provided for performing inter-system handover when balance is being finished or when the network signal strength falls. The first protocol is about when the balance comes near to finish and the second protocol is regarding the falling of the networks signal strength.

The method may comprise the step of monitoring at least one condition indicative of a need for the said handover, and initiating the handover when the said condition is beyond a second threshold. The second threshold is being preferably beyond the first threshold. So that the further information may be transmitted in advance of the handover itself being initiated.

In figure **2** our proposed inter/intra system handover is shown by the flow chart view when the handover is needed in the time of the expiration of the balance. It explains the procedure of the handover in the network system when it is needed. Let MH_1 being the calling mobile host, MH_2 being the receiving mobile host, MSC_1 is being the master switching control of MH_1 in a mobile conversation. Also let SIM_1 being the *SIM* associated to the network operated by MSC_1, SIM_a being the alternative *SIM* available and ready at MH_1 and MSC_a being the *MSC* that controls the network of the SIM_a.

With a sufficient balance the conversation should be continued uninterrupted. During a conversation, the run-time charging is operated at the billing system and it informs the *MSC* about the current balance status.

Informally, when the balance is expired (or crosses a predefined threshold), the MSC_1 informs the MH_1 that the balance is about to be finished and requests an answer if it wants to continue the conversation. Software/apps may get activated upon arriving of such a request. The software may show a yes/no dialog asking the user to respond. If the user responds positively, it will indicate that he/she wants to handover the call to the alternative *SIM*. A negative answer will terminate the call naturally. The software may also have functionality to perform necessary tasks at the device end to support the handover. The software/apps may show additional information that helps the user to take decision, but it is out of the scope of this discussion. When the user responds positively the software sends back the reply along with the information of the alternative SIM i.e. the mobile numbers and name of its respective networks operator that is controlled by MSC_a. MSC_1 then requests MSC_a to establish a call between MH_1 and MH_2 via SIM_a. MSC_a accepts the connection if and only if the SIM_a has sufficient balance. In absence of sufficient balance of SIM_a, the handover would not take place.

Two cases may arise - a) the *MSC* of MH_1 and MSC_a are belongs to two different operators and b) they are belongs to the same operator. The first case is typical but the second one is special.

In the first case, the communication channel after the handover will be from MH_1 to MH_2 via MSC_a, MSC_1 and *MSC* of MH_2. It can be tuned by establishing a channel from MSC_a to the *MSC* of MH_2 directly. It is an inter

network handover.

In second case, the handover can be tuned to establish a cost effective conversation channel. Here MSC_1 is supposed to handle the total communication alone. It is an intra network handover.

The two cases are discussed in detail below.

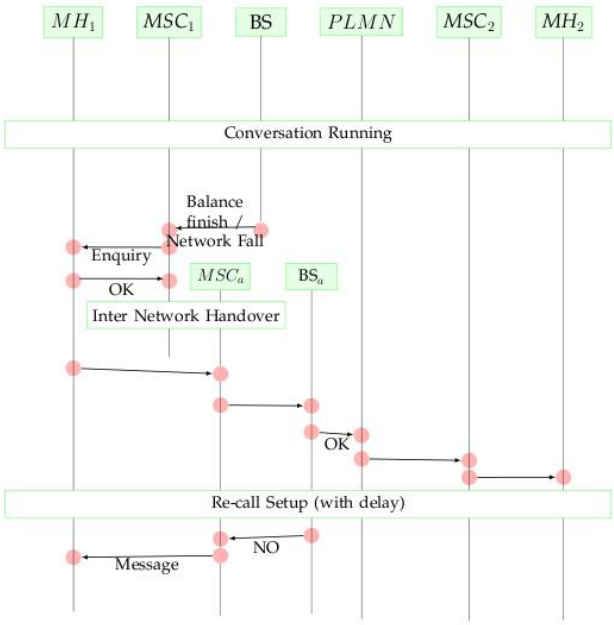

Figure 3: Inter network handover for different operators when balance crossed the threshold of either near to zero balance or significantly degraded signal strength.

4.1 Handover between Different Networks

The MH_1 and MH_2 are belongs to different operators. In the time of conversation, if the balance is being finished, the *BS* is being informed the MH_1 that the balance is already finished and also asks the MH_1 users if he/she wants to handover the call with the alternative *SIM* he/she must press 'OK'. If the user presses 'OK' then there an inter-system handover will take place and the MSC_1 will connect with MSC_a and MSC_a requests the BS_a for checking the balance. If the MSC_a is being said 'OK' by BS_a, then MSC_a will be connected with *PLMN* and then *MSC* of the MH_2 and after that a re-connection will be setup between MH_1 and MH_2 via BSC_a. If the network signal strength is being fall, the call re-setup is as same as above description. It is shown in figure **3**. By using the arrow line the connection is shown in the particular figure.

4.2 Handover Process Inside the Same Networks

In figure **4** MH_1 and MH_2 is the same operator and they are placed in different *MSC* and different *BSC*, and the third one which help to intra-system handover to continue the conversation with the help of the same network is also the same operator. When a call or conversation is running between the same operator and in the running time the balance is being finished the BS_1 gives a message to the MSC_1 that the balance has to be finished and it also inquiries the caller that if MH_1 wants to handover the call to the alternative *SIM*, if the sender or MH_1 press OK, the MSC_1 then hand it over with the MSC_a and MSC_a asks the BS_a to checks the bill, after checking the bill the BS_a gives a message. If the balance is sufficient then the BS_a connects with the *PLMN* of the MSC_2 and the *PLMN* makes a connection with the MSC_2 and after that the MSC_2 connect with MH_2 via the BSC_2 Then the call will be re-setup.

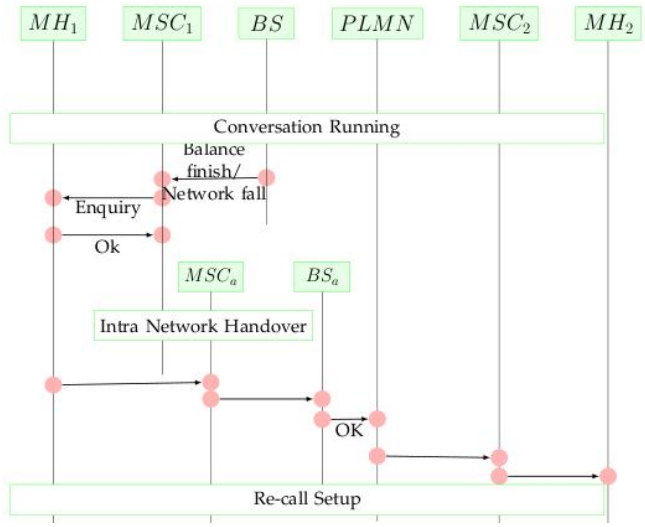

Figure 4: While conversation is running in the same operator an intra network handover is needed.

Other objects features of the presented method will become apparent from the following detailed description considered in conjunction with the accompanying drawings. It is to be understood, however, that the drawings are intended solely for purposes of illustration and not as a definition of the method, for which reference should be made.

5 Limitation of Our Work

We have proposed a theoretical method to solve the problem. The available wireless telecommunication simulation software does not fit for simulating our proposed solution. The available simulation software provides features mainly to measure physical quality of the system. It is almost impossible to simulate *BS, PLMN*, and *MSC* etc. apparatus for different mobile operators with the currently available software. Therefore, we are planning to develop a simulator for our purpose. We also want to test it in real life if at least two mobile operators agree to carry out the research.

6 Conclusion

We have presented a new and efficient technique for the inter/intra system handover in the time of balance finishing and network signal strength falling that helps to reduce the delay time to re-establish the call that is subjected to the inter handover process. The proposed protocol is ethnic enough to do work along with the operator management protocol. In now-a-days there is no method available for that both particular cases. Though there exists many type of handover process in time of

network signal strength falling but they are more expensive than the method we have proposed in our paper. There is no method available for regarding the run out or expiration of the balance. The proposed method is not only for network falling but also for the expiration of the balance that helps to reduce the cost and time to establish a new call. For those reasons the proposed method should be preferable.

References

[1] Lee, K.C. and Karmi, G. and Mohanty, B. and Sutton, T.R. and Ziv, N.A. (1999, August 17). Inter-system calling supporting inter-system soft handoff. US Patent 5940762. Available Online: http://www.google.com/patents/US5940762 (accessed on 15 August 2014).

[2] Tekinay, S.; Jabbari, B. Handover and channel assignment inmobile cellular networks. Communications Magazine, IEEE, vol.29, no.11, pp.42, 46, Nov. 1991 doi: 10.1109/35.109664.

[3] Johnson, C.; Cuny, R.; Davies, G.; Wimolpitayarat, N. Inter-System Handover for Packet Switched Services. 3G and Be-yond, 2005.

[4] Back, J. and Hulkkonen, T. and Vainola, K. (2006, August 8). Inter- system handover. US Patent No 7089008 B1. Available Online: http://www.google.com/patents/US7089008 (accessed on 15 August 2014).

[5] Ericsson, GSM System Servey, student text EN/LZT 123

[6] , 2008.

[7] Bell, J.R. (2002, September 3). Call re-establishment for a dual mode telephone. US 6445921 B1. Available Online: http://www.google.com/patents/US6445921 (accessed on 15 August 2014).

[8] Pollini, G.P. Trends in handover design. Communications Magazine, IEEE , vol.34, no.3, pp.82,90, Mar 1996 doi: 10.1109/35.486807

[9] Viterbi, A.J., Viterbi, A.M., Gilhousen, K. and Zehavi, E. Soft handoff extends CDMA cell coverage and increases reverse link capacity. Mobile Communications Advanced Systems an Components, Lecture Notes in Computer Science, Springer Berlin Heidelberg, vol.783, pp.541-551, 1994.

[10] Li Ma; Yu, F.; Leung, V.C.M.; Randhawa, T. A new method to support UMTS/WLAN vertical handover using SCTP. Wireless Communications, IEEE , vol.11, no.4, pp.44,51, Aug. 2004 doi: 10.1109/MWC.2004.1325890

[11] Tripathi, N.D.; Reed, J.H.; VanLandinoham, H.F. Handoff in cellular systems. Personal Communications, IEEE , vol.5, no.6, pp.26,37, Dec 1998.

[12] Lampropoulos, G., Passas, N. I., Merakos, L. F., and Kaloxylos, A. (2005). Handover management architectures in integrated WLAN/cellular networks. IEEE Communications Surveys and Tutorials, 7(1-4), 30-44.

[13] Dutta, A., van den Berg, E., Famolari, D., Fajardo, V., Ohba, Y., Taniuchi, K. and Schulzrinne, H. (2006, September). Dynamic buffering control scheme for mobile handoff. In Personal, Indoor and Mobile Radio Communications, 2006 IEEE 17th International Symposium on (pp. 1- 11). IEEE.

[14] Farshad Family, The Rise of Multi-SIM users: Customers shifting to dual SIM phones to have effective control over costs, The Nielsen Company. Press Release, 2012.

[15] Asif Shaik (2013, 24 September). Dual-SIM mobiles phones are wildly popular in India. Available Online: http://www.gomonews.com/dual-sim-mobiles-phones-are-wildly-popular-in-india/ (accessed on 15 August 2014).

[16] Linda Sui (2011, 16 November). India Leads Emerging Markets in Driving Dual-SIM Handset Sales. Available Online:

[17] http://www.strategyanalytics.com/default.aspx?mod= reportabstractviewer&a0=6860 (accessed on 15 August 2014).

[18] LG A290. Available Online: http://www.lg.com/in/mobile phones/lg-A290 (accessed on 15 August 2014).

[19] Cherry Mobile Q70 Quad. Available Online: http://www.cherrymobile.com.ph/products/lifestyle/q70-quad (accessed on 15 August 2014).

[20] Benefon and VLP Introduce a World Innovation: Benefon Twin Dual SIM Utilizes Two SIM Cards, PR Newswire. Available Online: http://www.prnewswire.co.uk/ (accessed on 15 August 2014).

Nusrat Jahan Farin is an undergraduate student in Department of Computer Science and Engineering of University of Liberal Arts Bangladesh. She is a student member of ULAB IEEE Student Branch. Her research interest is wireless telecommunication and networking as well as in neural networking.

Mahmudul Faisal Al Ameen is a senior lecturer in Department of Computer Science and Engineering of University of Liberal Arts Bangladesh. He is also enrolled in doctoral course in The Graduate University for Advanced Studies in Japan. He finished his MS from East West University at 2007 and BS (Engr.) from Darul Ihsan University at 2006. His primary research area is formal program verification. He is also interested in diverse area of computer science for development such as multi-agent system, encryption, networking, artificial intelligence, etc.

Emerging Technologies in Business Intelligence and Advanced Analytics

[1]Nayem Rahman, [2]Dale Rutz, [3]Shameem Akhter, and [4]Fahad Aldhaban

[1]IT Business Intelligence, Intel Corporation, Hillsboro, OR, USA
[2]Supply Chain IT, Intel Corporation, Santa Clara, CA, USA
[3]Department of Computer Science, Western Oregon University, Monmouth, OR, USA
[4]Department of Engineering and Technology Management, Portland State University, Portland, OR, USA

Email: [1]nayem.rahman@intel.com, [2]dale.m.rutz@intel.com, [3]akhtershameem93@yahoo.com, [4]aldhaban@yahoo.com

Abstract—Modern business entities are awash in raw data due to the proliferation of technology. In order to be competitive this data must be refined and organized into trusted information in order to make business decisions in an ever changing environment. Organizations must identify and respond to trends and opportunities on a near real time basis. To survive business organizations are making efforts to improve and enhance their decision making capability using business intelligence (BI). In order to be effective they must improve the performance of BI tools and while driving down associated costs. The rate of data growth is alarming, even a few years ago the hardware and software available made most companies unable to capitalize on the opportunity to harness the power of information within the raw data. Recently, because of the advancement of computing technologies, software engineering, data warehousing technologies, cloud computing, computer processing powers and the emergence of smart-phones the demand for business intelligence tools has increased tremendously. These tools have become more sophisticated than ever before, allowing the perusal and refinement of huge datasets. Emerging technologies and methods are being adopted steadily by business organizations in order to make sense of the explosion of data. This article gives an account of the emerging technologies in business intelligence and data warehousing that significantly improve the performance of data warehouses and consequently, business intelligence tools.

Keywords— Advanced Analytics, Big Data, Business Intelligence, Cloud Computing, Data Warehouse, In-Memory Analytics, Mobile BI

Earlier version, "Emerging Technologies in Business Intelligence" by Rahman, N., Aldhaban, F. and Akhter, S. appeared in Proceedings of PICMET '13. ©2013 IEEE.

© University of Liberal Arts Bangladesh
All rights reserved.

Manuscript received on 15 August 2014 and accepted for publication on 29 September 2014.

1 Introduction

TODAY'S business environment is more competitive than ever before due to a number of factors including the global nature of business, the proliferation of technology and the explosion of data in the environment. Supply chains span the globe and business associates must share information and make decisions on a near real time basis. This is made possible through computing technologies [1], software engineering, data warehousing technologies, cloud computing, and lately with the emergence of hand held devices such as tablets and smartphones. The presentation of information on these devices is often used by organizations to make informed business decisions in changing environments.

Companies typically create and collect data in operational data stores. This data is then moved to the enterprise data warehouse for various analytical needs. There is a push to access information faster, often as soon as it is created. To achieve that database engines need to have a faster processing capability [30]. While organizations want a state of the art data warehousing and BI environment they also continuously strive to bring down their IT infrastructure budget. Data warehouse and BI tools involve huge capital expenditure. Small and medium-sized companies cannot afford that. With the advent of cloud computing data warehouse infrastructure costs become incremental to the size of the business need as cloud services allow companies to pay-for-use avoiding the need to own a data warehouse, which can be both costly and time consuming [3] to build. Organizations have started to move from traditional server-based data warehousing to a private cloud.

Businesses are facing challenges in today's environment because of the exponential growth in data year over year. Data is created by business transactions, mobile devices and individuals as well as business entities who share information electronically with each other. Addi-

tionally more and more information is published electronically rather than using more traditional paper methods.

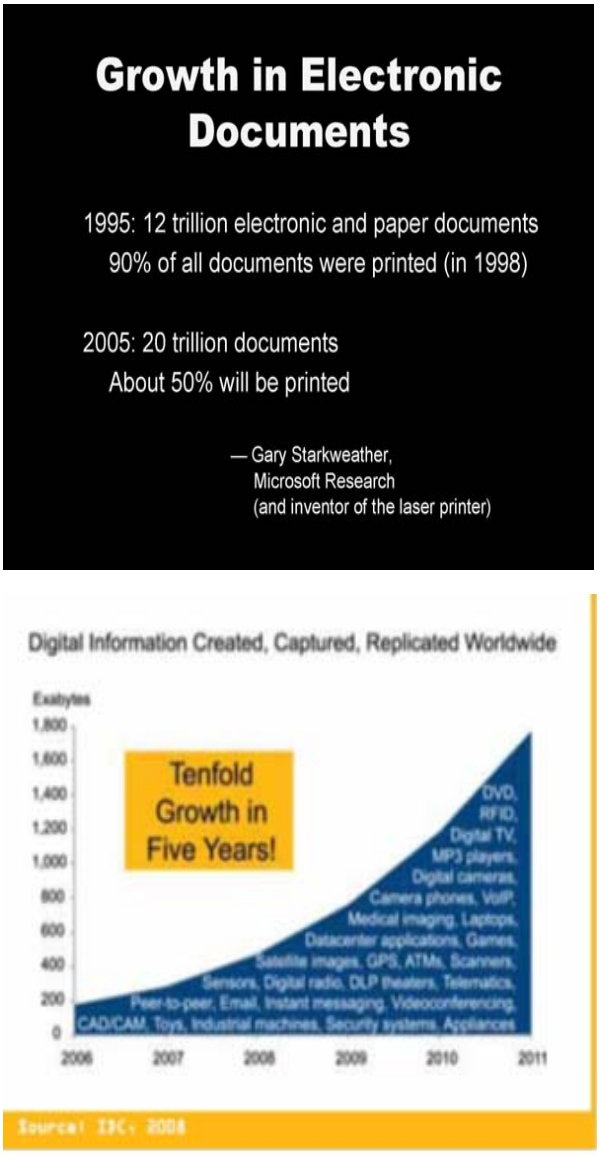

Fig. 1: Growth in Electronic Documents.

Consequently, data storage and retrieval response time increases. So, data warehousing tools and database needs to be more powerful with parallel processing capability to expedite refreshing data warehouses. Fortunately, new tools and parallel processing database engines [40] are now available to assist with overcoming that challenge. Business organizations find business value in unstructured data which are in a huge volume – mostly a few terabytes to hundreds of terabytes. This data comes from many sources including mobile, social media, videos, sensors and surveillance [46] and has a new name called 'big data' as opposed to normal data. Conventional databases are used to store, process, and manage structured data. For big data, which is mostly unstructured and in huge volume, a completely new set of computing technologies have emerged [8]. Business organizations are showing special interest in big data to generate new business out of it. To view, analyze, and visualize both structured and unstructured data BI and visualization tools have emerged. The smart phone and tablets have brought Mobile BI into picture [29], [15].

Business organizations need to deploy emerging technologies in data warehousing (one with a parallel processing capability) and state of the art BI tools (e.g., in-memory analytics capability) to achieve faster data processing of, business intelligence to help making strategic decisions [11], [47] at the right time. To facilitate businesses to make right time decisions a series of new technologies have emerged. In this article, we will cover latest database and business intelligence technologies.

2 Literature Review

In today's data-driven business decision making environment data warehousing and business intelligence play a significant role and are dependent on each other [12]. Data warehousing is deemed one of the six physical capability clusters of IT-infrastructure [51]. Data warehousing has been a research topic for the last two decades [5], [22], [28], [43], [52]. Business intelligence is also gaining growing significance [23], [49] over the last one decade. Data warehouse maintenance [37], implementation [33] and best practices have been explored [53], [30]. Researchers and practitioners have written papers on business intelligence design [20], [39], [9], [38], [54]. BI tools [14], [41], [48] have flourished significantly.

In business organizations the data volume has been increasing significantly every year. Data warehouse users express concern about slowness of access to time-critical data [45]. This has been putting continuous pressure on IT departments to improve performance [25] and efficiency of IT infrastructures. There is a strong correlation between information technology capability and organizational agility [24]. To speed up ETL processing in data warehousing Tank et al. [45] suggest techniques to join operations and data aggregation. Allen & Parsons [2] propose adjusting and reusing existing queries to help improve performance of data warehouse data retrieval process.

Chen et al. [10] state that business intelligence and analytics has emerged as an important area of study to solve data viewing related issues with both 'normal' and big data in business organizations. Watson et al. [50] emphasizes that "to be successful with real-time BI, organizations must overcome both organizational and technical challenges." Business organizations need to adopt emerging technologies to overcome technical and performance issues with traditional tools. The real-time BI helps in making right time business decisions which in turn al-

lows for potential increase of revenues [50]. Ramakrishnan et al. [34] examines how external pressures influence the relationship between an organization's business intelligence (BI) data collection strategy and the purpose for which BI is implemented. Steiger [42] asserts that "BI techniques can be applied to knowledge creation as an enabling technology."

In this article, we show the latest technologies that emerged in data warehousing, BI, big data analytics and in cloud computing, and how they help support faster decision making. These technologies help in decreasing latency in data warehouse refreshes and without impacting performance and resources consumption [31]. These technologies allow for achieving maximum benefits in terms of efficiency, revenue generation and cost avoidance.

3 Parallel Processing DBMS as Emerging Technology

A very few companies have a parallel processing data warehousing architecture. Lately, other DBMS companies have been trying to implement similar kinds of technology. As we see tremendous data growth in medium to large companies, current commercial databases encounter huge amounts of data that need to be processed in loading and business intelligence purposes. Most of the commercial databases are not capable of processing millions of rows within a few seconds to support business intelligence decision making. Parallel processing architecture of DBMS is the right technology towards that endeavor.

In this article, we provide an overview of a parallel processing architecture of a commercial DBMS. Figure 2 shows the parser engine (PE) at the top of hierarchy. The parser of the PE parses and optimizes SQL requests and then dispatches the optimized plan to AMPs over BYNET. After SQL request is processed the query results are returned back to the requesting user via the BYNET. The BYNET loosely couples Symmetric Multiprocessing (SMP) nodes in a multi-node system. There are two network links for each node. The AMPs and PEs send and receive messages using BYNET. It provides communication path among nodes. It merges SQL answer sets back to PE. The BYNET enables parallelism.

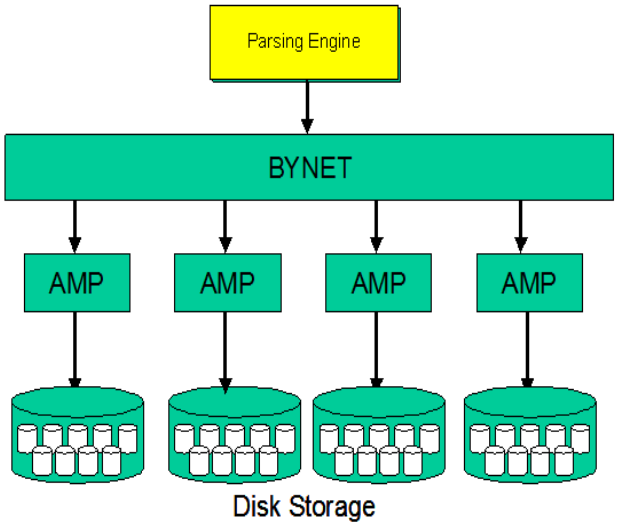

Fig. 2: A Parallel Processing DBMS.

In a parallel processing DBMS architecture a large number of individual access module processors (AMP) are used. The AMPs in DBMS work in parallel. This is also called shared nothing architecture. The data of a table does not get stored into a single AMP and instead is distributed across all AMPs. A hash algorithm decides which record to go to which AMP based on primary index (PI) of the table and during data retrieval all required AMPs participate in the data retrieval process based on a SQL query. That is how a parallel processing DBMS maintains parallelism during both data store and retrieval processes. The data access module processor (AMP) stores and retrieves the distributed data in parallel. In data retrieval process each AMP is only responsible for the rows it stores. A particular AMP cannot pull rows that belong to a different AMP. As far as the AMPs are concerned, it owns all of the rows. The AMPs cannot access each other's data due to shared nothing architecture. The AMPs are designed to work in parallel and return the request results in the shortest possible time.

In SQL writing the ETL programmers must make sure that their SQL takes the parallel processing architecture of DBMS into consideration. Parallel processing database system is a key technology to adopt in handling large volumes of data when loading data warehouses as well as retrieving data from data warehouses for business intelligence purposes using reporting and data mining tools.

4 Emerging Technology in Big Data

Big data refers to dataset, which conventional DBMS cannot store, manage, or analyze. So big data is not limited to analytics [35], instead, big data enables collection, storing, organization and retrieval of information, which in turn enables analyzing and sharing. All of these activities pose great challenges when dealing with large data volumes in a variety of formats. Data comes from many

sources including sensors embedded in processes, systems consisting of operational data, images, videos, documents, mobile devices, and the Internet. Social media is also contributing to the explosion of data in the environment as people post and share information about themselves and their preferences, businesses are quick to capitalize on that data. While organizations have been encountering large volumes of data for years, the exponential growth of data combined with new technologies (e.g. mobile devices and social media) has resulted in a need for better ways to organize and analyze the information. With the maturity of computing technology, processing power, and other data processing and BI tools, organizations are able to take advantage of big data to provide greater insights while assessing new business opportunities resulting in better decision making. Studies show that organizations that adopt data-driven decision making have been successful in increasing productivity 5-6% higher than competition [27]. Big data is used to empower organizations to improve their predictive capabilities [35].

Characteristic	Description	Influencer
Volume	A few terabytes to hundreds of terabytes of data need to be captured, processed, stored, and analyzed	Data volume keeps growing in source
Velocity	Given the volumn the data need to captured, processed, and displayed faster for right time business intelligence and decsion making	Increase in data sources. Improved computing, processing, BI & Visualization technologies
Variety	Includes a variety of data sources with unstructured, semistructured, and structured data. More than 90% unstructured	Sensors, social media sites, digital pictures, video, transaction records, and communication surveillance
Veracity	The quality and provenance of received data. As data most cases data is no structured data consistency is an issue	Data-based decisions require traceability and justification
Value	Provides greater insights generating new business value	Corporate business value

Fig. 3: Big Data with emphasis on 5 V's [46].

Big Data is identified by five factors - volume, velocity, variety, veracity and value. As the name says big data references an enormous amount of data which cannot be handled by conventional database systems and associated tools. Given the volume of data, it has become important to have the capability of receiving, processing and storing data faster (velocity). Big data is also refers to data that comes from many sources and in different formats (variety). The data is unstructured (more than 90%), semi structured and structured. This unstructured nature of data invalidates conventional database systems, which are meant for managing structured data. As data is mostly unstructured data consistency issue comes into picture (veracity). Again, that is due to the nature of source data (mostly unstructured). Business finds value as long as there is traceability and data processing is done by following some processes. With regards to the characteristic, business organizations find business opportunity in big data. One good example is predictive analytics using big data. Big data system provides capabilities for analyzing a greater breadth and depth of data [46].

The big data challenge compels computer scientists, programmers, and information technology professionals to come up with a new paradigm. It is about a complete set of new technology, tools and techniques to receive large volume of data, process them, organize, store and display. There are several technological advancements that have recently occurred which effectively deal with 5 V's of big data. HBase database has emerged as a column oriented database scaling to billions of rows. To handle large volume of data open source framework, Hadoop provides a distributed file system (HDFS). To process large volume of data MapReduce is used for parallel computation on server clusters. Thus big data is distributed and a small portion of data resides on each node. This is shared nothing architecture. Each node possesses its own autonomic unit of CPU, RAM and storage. Not much data movement is needed as the processing occurs where data resides. MapReduce allows lower cost processing of massive data. Hive provides capability of data warehouse with SQL-like access. On the data mining front Mahout provides a library of machine learning and data mining algorithms. Sqoop is used to import data from relational databases. Zookeeper tool is used as a configuration management and coordination. From big data capable database systems there are a couple of new database systems including Hbase and in-memory database. Parallel processing DBMS is best suited for big data because it has parallel processing architecture.

Business organizations have been conducting a variety of test cases using big data to prove usefulness and fulfill business needs. In one of our test cases we faced computing and scalability issue with existing technologies (database and other applications) in comparing all pairs of a few million proteins. This search and comparison activities overburdened the conventional database tables. Later we needed to do this comparison between 20 million proteins. We realized that this cannot be accomplished with existing technology. Here, Big Data technologies come into picture – Hadoop, Map Reduce, Hbase, Hive, etc. Our experiments show that big data technologies has to do the said comparison and analysis by reducing the processing time from days to hours. Another use case was about dealing with medical monitoring data to improve patient outcomes. "The patients routinely are connected to equipment that continuously monitors vital signs, such as blood pressure, heart rate and temperature. The equipment issues an alert when any vital sign goes out of the normal range, prompting hospital staff to take action immediately. The use case result is an early warning that gives caregivers the ability to proactively deal with potential complications, such as detecting infections in premature infants up to 24 hours before they exhibit symptoms" [46]. We conducted another use case to come up with a smart traffic intelligence system, a predictive analytics using Hadoop technologies. The challenge was to analyze city traffic data to derive statistics for crime preven-

tion, information sharing, and predictive traffic analysis. By using real time traffic data predictive analytics was performed. The big data technologies helped with generating automated queries for traffic violation, data mining of fake licenses in a minute based on data captured for a week. This has improved the predictive traffic forecasting capability of city authority.

Chandramouly & Stinson [8] provide an architectural overview of big data solution that allows for effective use of BI tools to run business with operational efficiency and competitive advantage. While big data holds hidden information, business analysts need to read or view that business information using some analytical and visualization tools [21]. Heer and Kandel [17] suggest some interactive analysis tools for big data to empower data analysts to formulate and assess hypothesis in a rapid manner. To make meaningful information from big data, visualization matters. Visualization of data helps us to understand data, see patterns, spot trends and detect outliers [16]. Heer and Shneiderman [18] emphasize several visualization techniques of big data. They propose a taxonomy of interactive dynamics for visual analysis consisting of data view specification, view manipulation and processes.

5 In-Memory Analytics in Business Intelligence and DBMS

In-memory data processing is a very new technology that has recently emerged. It's been used in both database and business intelligence space. In-memory has several key performance benefits [13]: dramatic performance improvements; cost-effective alternative to data warehouses; discover new insights; and connect insight with action.

Read and Write Capabilities
Centrally Managed Data, Business Hierarchies, Rules and Calculations
Empower Business Users to Analyze any Combination of Data
High Impact Visualizations
Extend and Transform Excel
Designed for Modern 64 bit Architectures
Easy to Insall and Easy to Use

Fig. 4: Capabilities of In-Memory Analytics [13].

One leading BI company [13] provides several capabilities with in-memory analytics. These include read and write capabilities; centrally managed data, business hierarchies, rules and calculations; empower business users to analyze any combination of data; high impact visualizations; extend and transform excel; designed for modern 64 bit architectures; and easy to install and easy to use. A leading ERP company has come up with in-memory database technology which provides better performance of analytics and transactional applications. The in-memory database is being positioned to handle big data in terms of several terabytes of data in memory for analytical purposes.

Some leading commercial database companies have launched its in-memory database and business analytics technology. Their in-Memory machine features an optimized BI foundation suite and its 'TimesTen' In-Memory database. The BI Foundation takes "advantage of large memory, processors, concurrency, storage, networking, kernel, and system configuration of the exalytics hardware. This optimization results in better query responsiveness, higher user scalability" [27].

6 Data Warehousing and BI with Cloud Computing

Data warehousing projects are very expensive. Normally medium to large companies maintain their own data warehouse. On the other hand, companies of all sizes have data growing over the years. Data warehouse and BI on the cloud have opened the door for all sizes of companies to use these technologies. The Cloud is transforming the economics of BI and opening up many new possibilities for organizations of all sizes [47]. With cloud, business organizations will find it relatively easy to fund data warehousing projects given the low cost and no maintenance involved. For cloud-based data warehousing long term capital expenditures is not needed. Businesses can pay for cloud service on a weekly, monthly or pay per service basis. Cloud data warehousing and BI will allow business organizations to conduct more short-term ad-hoc analysis. Building an organization's own data warehouse takes a long time to set up infrastructure and line up resources. With cloud individual business organizations do not have to worry about infrastructure and logistics. With cloud technology it takes a few hours or days to get an initial data warehouse created. Cloud-based data warehouse is economically suitable for sandbox kind of development and testing as well as short-lived projects. Cloud-based analytic databases will enable small companies to warehouse and analyze a large volume of data even though their BI budgets and staff are much smaller than larger enterprises. On the other hand, analytic SaaS market will develop faster [19]. Amazon is the leading provider of cloud services. All leading commercial database companies have teamed up with a leading cloud provider to run their databases on the cloud platform (Amazon EC2).

Cloud service providers provide both public and private cloud services. Given that most of the business organizations have financial and other mission critical data, using public cloud is not considered the best choice as public cloud is shared by multiple parties sharing the same network, server, software and hardware. Data security is the biggest concern. While cloud provides financial advantage, concern about security data and restricting access to limited individuals grows as data is stored outside company firewalls on external clouds, therefore industry experts often suggest using private cloud from

the standpoint of data security. They also suggest using multiple layers of data protection (e.g., password encryption) and the higher levels of security [4] to ensure compliance requirements of individual business organizations. Another limiting factor of external public clouds is the difficulty in transferring large volumes of data over the internet to external clouds for storage. Many small companies today which are forced to use public clouds for financial reasons are resorting to shipping hard drives full of data via overnight shipping companies in order to transfer huge volumes of data to the cloud.

As emerging technology, a leading cloud provider recently announced a new cloud-based data warehousing and BI tool [7]. This service provides service in big data analytics as well. The customers can pay per service basis to make it affordable to small and medium-sized businesses [26]. The data warehouse companies are already on the market [4] with cloud-based data warehouse appliance offering. So with the offering of cloud-based data warehousing and BI technology by these leading companies, the adoption of data warehousing and BI should expand much faster [19].

It is clear that with the advent of big data, business professionals need better, more efficient ways of consuming that data. The goal is to use the information gleaned from big data to make better business decisions faster, thus improving velocity and ultimately, profitability.

7 Advanced Analytics

The buzz over advanced Analytics in the business world came about when companies started showing off dashboards full of visually appealing controls and splashy colors. While the initial reaction was one of excitement concerns over form and function soon surfaced. Expertise in creating and maintaining these dashboards was scarce and expensive. Further, many of the early advanced analytics dashboards were little more than flashy displays which did little to enhance business decisions. As a result usage metrics were upside down, with initial metrics showing many uses per day, trending down to a point where 6 months later no one was viewing the dashboard at all. Clearly, many early advanced analytics implementations where the result of marketing hype and failed to deliver the promised business value.

Today, many people are starting to use the terms advanced analytics and big data interchangeably. This is because the realization has set in that the goal of advanced analytics is, and should be, to make better business decisions faster. In order to achieve this goal two things are required, those being: (1) Timely access to relevant data which has been cleansed, processed and formatted for rapid access. (2) A presentation layer which allows business professionals to, at a glance, identifies patterns and trends in order to react with appropriate decisions.

In a simple example at a recent conference a presentation layer company displayed a 20 x 20 matrix of characters and asked participants to count the number of letter 'a' s. On the next slide participants were asked to do the same thing, with the letter 'a's highlighted in red. Consider the tables below and the difference is obvious:

me8xwask;ldjaflksdjf	me8xwask;ldjaflksdjf
yewsghpoe9chefgk;d	yewsghpoe9chefgk;d
ps;kdjgls;adjkglsdjfla	ps;kdjgls;adjkglsdjfla
x;skdjf;lsdkf;lasdkfsl	x;skdjf;lsdkf;lasdkfsl
asldkfjlskdjfdslfkjsadc	asldkfjlskdjfdslfkjsadc

Fig. 5: Matrix of Characters.

So we can think of advanced analytics as being enabled by big data technologies and similarly we realize that big data is dependent on advanced analytics in order for business professionals to be able to consume and apply the information that big data provide. The goal of analytics is to traverse huge amount of data, seeking patterns which can be used to develop business opportunities. Previously this kind of work was done by statisticians using data mining tools. Today there is a proliferation of tools which allow trained professionals to sample, chart, analyze and report on data. This has given rise to a new type of job, the data scientist. These professionals are charged with the responsibility of creating structure and order out of the chaos that can accompany huge volumes of data.

Data Scientists organize data using rules. They define data quality and implement rules which cleanse data. They also set prescriptive guidance such that data falling outside of defined boundaries trigger alters which cause people to investigate. Initial application of these rules has fallen on fraud detection and remediation. It is clear that there are numerous uses of these actives however. Shopping basket analysis is another clear winner here. Once it is noticed that people or businesses who buy product X often are interested in product Y then directed marketing can target individuals who are most likely to consume a product or service.

Shopping basket analysis examples illustrate a shift in the focus of business intelligence. In the past most forms of analytics were backward looking. What happened in the recent past and how does that compare happenings farther in the past and so on. With the advances in hardware and big data software business users can now look at patterns and trends as they occur, giving rise to real time business intelligence. This allows businesses to use techniques such as Predictive Churn analysis to identify vulnerable customers before they move to a competitor's products or services and win them back before they are even gone.

One of the most important outcomes of the convergence of big data and advanced analytics is that big data can reduce or even eliminate the need to use "sampling"

when doing data mining. Sampling involves using only a portion of the data to analyze and predict and results in a type of error called bias. With big data technology coupled with hardware and software performance improvements data mining can now be run against entire data sets rather than a sample resulting in much more accurate prescriptive analytics and therefore the best possible business decisions.

Many companies in the market have taken advantage of new advances in technology to allow two phases of data warehousing using Big Data. One is called the infinite store, typically a noSQLdatabase which uses file system storage. This gives virtually unlimited capacity at low cost. Companies are coupling this infinite store with and "instant store" which holds relevant information in memory. By using solid state devices, enhanced search and retrieval algorithms as well as the latest processor technologies retrievals which previously took 20 to 30 minutes can be accomplished in less than a second. These advances in technology are allowing business people to make data driven decisions on a near real time basis.

The typical business user accesses information in order to make informed decisions. It is critical that the volume of data which reaches the end users device is reduced to what is needed and relevant. One of the tenants of big data is to host not only detail but also aggregate, or processed data. Detailed data is processed into aggregates and those aggregates are what get transmitted to the presentation layer. Thus a salesman can pull out a phone or a tablet and select a customer and get information such as year to date sales by product category and time between orders as they reach the customer site. They can then use that information to suggest to the customer that they may be nearly out of certain items which have not been ordered recently. Similarly they might compare this customer's year to date purchases with that of last years and notice a change in pattern which may trigger them to make suggestions or ask questions. Placing these kinds of data tools into the hands of the sales force is necessary in today's business climate.

8 Presentation Layer Form Factors

Modern technology allows information to be presented and consumed on a myriad of devices. This is a stark contrast to a world even 5 years ago where almost all business data was presented and consumed on computers. Clearly today this is not the case. In today's environment people are using phones as "pocket computers." They are using tablets, notebook computers, desktop computers, and displays in their cars and even television monitors to access information as well as entertainment. In fact, with the advent of social media the line between data and entertainment has blurred. Where once we had a clear distinction between computers used for viewing columns and rows of data and televisions used for viewing moving pictures today we find a multitude of devices which can be used for either purpose at any given point in time. Further, many of today's "visualizations" involve animation (e.g. bubble charts). Data sources are omnipresent; everything from intranets to the internet to the cloud puts petabytes of data within reach of us all. Companies have responded to the opportunities provided by the onslaught of new devices by releasing software which extends their Advanced Analytics presentation layer software to mobile devices. Today, many companies offer options which will deploy the same interface to computers, tablets and phones. Thus traditional users and mobile users can access the same information and view and interact with it in the same format regardless of their location or the device at hand.

This evolution of devices has led to a corresponding revolution in software engineering. Requirements today are very different than they were even a few years ago. Hand held devices are often more powerful than computers of yesterday. As a result computers are used less and less, while devices such as tables are omnipresent, at conferences, in the office, in the home and in the hands of the sales force. Users require interfaces such that the behavior of the interface is largely the same regardless of the device being used. This requirement is answered with something called the "app store." Each major device manufacturer has an app store. Similarly companies have internal app stores for their proprietary applications. Developers build applications in provider agnostic languages such as Java and HTML5. They can then upload the raw application to different app stores for different devices and they will be compiled and work correctly across applications. These same applications can also usually be hosted on a web page. Thus users have access to the same data in the same format on their lap top, their phone, their tablet, their desktop computer and also often their gaming device as well as their television.

With the proliferation of devices come increased security concerns. Hand held devices are designed to be able to broadcast information using technologies such as blue tooth because they are communication devices. Therefore applications which are secure on the web may or may not be on a hand held device. Also differences between device manufactures mean different app stores which results in the same application being more secured on some devices as compared to others. Users are concerned and with good reason. Businesses are even more alarmed because not only is the information transmitted to or from a device over the airwaves less secure but the devices themselves are easily, and therefore frequently, lost or stolen. A whole host of products and services are offered on the market to address these information security concerns. These concerns do present a barrier to entry when it comes to sensitive organizational data.

9 Business Intelligence in Mobile

Recent advancements in mobile devices have had a

positive impact in the business intelligence field. Industry surveys show that mobile BI is gaining popularity. According to a recent survey, "24% of enterprises already use or are piloting mobile BI applications, while 37% are considering mobile BI for near-term implementations" [44]. In another survey it was observed that "87% of the respondents reported that they planned to use a mobile device to help make purchasing decisions during holiday shopping" [29]. The trend of computer-based reports is changing with the emergence of Business Intelligence system applications that run on mobile devices, such as smart-phones and tablet computers [6]. The Gartner research findings indicate that one third of BI functionality will be consumed through hand-held devices. With the growing popularity of the tablet, the adoption rate of mobile BI is expected to soar [36]. The proliferation of apps which run on multiple devices (phone, tablets computers) has allowed access to BI information at anywhere and anytime. These devices have downloading capabilities faster than expected due to the proliferation of cloud based technologies. Additionally, touch-screens have improved the user experience [19]. All these speak for business intelligence in the Mobile era as opposed to desktop-based business intelligence. The corresponding increase in mobile data traffic based on the explosion of BI on mobile devices is startling:

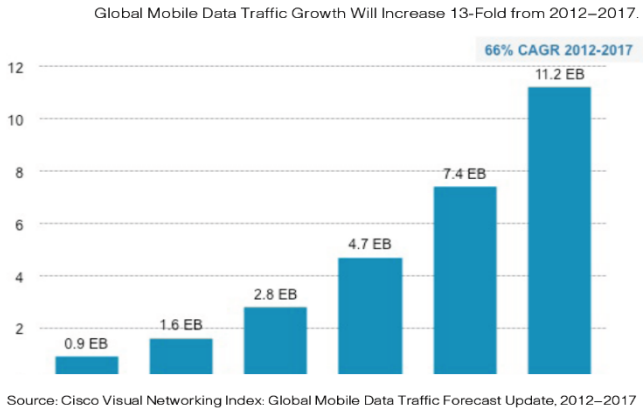

Fig. 6: Global Mobile Data Traffic Forecast.

Robb [36] reports that the top ten mobile intelligence apps. All of this application operates on iPhone, iPad, Blackberry, and Windows Mobile. Each offers several great features. Some of these mobile applications have the ability to navigate through displays with interactive graphs, tables and charts. Some other mobile architecture provides data visualization to mobile devices. Some companies offer bundled server software that integrates with most BI platforms and data warehouses. Some of the BI companies' Mobile architecture extends graphs, grids, enterprise reports and information dashboards and its features also include out-of-the-box integration with Google maps [36].

With the advent of smart phone and tablets the Mobile Decision Support System (MDSS) has emerged as a new decision support system in this early 21st century. Haghighi suggests that MDSS can be beneficial to application domains where critical decisions need to be made under time pressure and the decision-makers are on the move [15]. There are many industries that use the emerging mobile BI technologies. These include mobile healthcare, emergency management, mobile commerce, education, mobile banking [15], purchase and selection decisions, and negotiations [29].

Many of these applications are game changers for the industries they serve. For example health care has traditionally been provided by doctors meeting face to face with patients who travel whatever distance is necessary to see the doctor. Today, companies such as Intel Corporation manufacture devices and suites of applications which allow medical technicians to meet with patients in remote settings. Technology is used to connect the remote setting with the doctor who is supplied with all of the information collected while simultaneous interacting with the patient. The doctor can meet face to face with the patient while at the same timing use real time analytics to identify issues and potential resolutions.

Another example is education. Previously most academic materials were available only in printed media. Today we are seeing a major shift, especially with emerging nations providing content only in electronic form as printed books become obsolete due to expense and environmental footprint. This electronic media lends itself to automated search and retrieval, meaning students of tomorrow will have limitless access to information and will need better and better tools to distill data down to relevant information. In addition, they will be accessing this electronic content more and more from alternative devices (eBook readers, tablets, their cars and even phones).

Traditional sales and service providers are also seeing their industries shift to embrace advanced analytics and near real time business intelligence. Take for example the providers of in home video content. Their predictive churn models can identify customers who fit into various categories of users who are likely to leave, allowing companies to reach out to these customers to offer them bundles of services at discounted prices which tempt the user to stay with the provider. Other algorithms can determine the best way to reach out to the customer (printed materials, e-mail, a phone call, a text alert, et al).

What if-scenario (e.g. write-back) are quickly becoming an integral part of advanced analytics. Data retrieved from data warehouses contains the actual facts. Often business people need to know what the result would be if key facts changed. Write-back analytics allow users to enter new facts in a what-if scenario and then rerun models to determine the impact of the change. There is a need to save not only the parameters submitted for the what-if analysis but also the resultant model. Many companies are offering this type of functionality out of the box.

10 Concluding Remarks

In this article we explored the emerging technologies in data storage, retrieval as well as business intelligence and advanced analytics. We also discussed the benefits of using these new technologies. These emerging technologies and methods are and will continue to be steadily adopted and enhanced in the near future by business organizations. Use of these new technologies in data warehousing and business intelligence will help organizations make strategic and tactical decisions at the right time and increase revenues. Additionally these technologies are required in the existing market in order for companies to remain competitive. Access to relevant and understandable information in our ever changing environment is clearly the only way to survive.

Acknowledgment

Earlier version of this article was presented at the IEEE Portland International Center for Management of Engineering and Technology (PICMET 2013) Conference, San Jose, California, USA, July 28 - August 1, 2013 [32]. This article has been substantially revised and enhanced, based on comments received during conference presentation and comments received from anonymous reviewers of this journal. The author would like to thank the anonymous reviewers for their constructive comments provided on earlier drafts of this article.

References

[1] S. Akhter, N. Rahman, and M.N. Rahman, "Competitive Strategies in the Computer Industry," International Journal of Technology Diffusion (IJTD), Vol. 5, No. 1, pp. 73-88, January-March, 2014.

[2] G. Allen and J. Parsons, "Is Query Reuse Potentially Harmful? Anchoring and Adjustment in Adapting Existing Database Queries," Information Systems Research, Vol. 21, No. 1, pp. 56-77, 2010.

[3] R. Armstrong, "Data Warehousing: Dealing with the Growing Pains," IEEE Proceedings, 1063-6382/97, pp. 199-205, 1997.

[4] J. Bair, "Emerging Cloud Appliances for Business Intelligence and Data Warehousing: 6 Challenges and Opportunities," Retrieved on 04/24/2013 from: http://www.b-eye-network.com/view/16915, 2013.

[5] S. Brobst, M. McIntire and E. Rado, "Agile Data Warehousing with Integrated Sandboxing," Business Intelligence Journal, Vol. 13, No. 1, 2008.

[6] Business Intelligence Strategy, "Smarter Mobile Devices Drive Demand for Mobile Business Intelligence Applications," Retrieved on 01/12/2013 from: http://www.businessintelligencestrategy.com.au/news-views/mobile-business-intelligence/, 2013.

[7] B. Butler, "Is the cloud the right place for your data warehouse?," Network World, Retrieved on 04/24/2013 from: http://www.networkworld.com/news/2012/121012-aws-data-warehouse-264957.html, 2012.

[8] A. Chandramouly and K. Stinson, "Enabling Big Data Solutions with Centralized Data Management," Intel IT White Paper, January 2013, Available at: www.intel.com/it, 2013.

[9] S. Chaudhuri, U. Dayal and V. Narasayya, "An Overview of Business Intelligence Technology," Communications of the ACM, Vol. 54, No. 8, pp. 88-98, 2011.

[10] H. Chen, R.H.L. Chiang and V.C. Storey, "Business Intelligence and Analytics: From Big Data to Big Impact," MIS Quarterly, Vol. 36, No. 4, pp. 1165-1188, 2012.

[11] B.L. Cooper, H.J. Watson, B.H. Wixom and D.L. Goodhue, "Data Warehousing Supports Corporate Strategy at First American Corporation," MIS Quarterly, Vol. 24, No. 4, pp. 547-567, 2000.

[12] C. Eden and V. Padmanabhan, "Building an Enterprise Data Warehouse and Business Intelligence Solution," Intel Information Technology White Paper, pp. 1-11, 2006.

[13] Gartner, Inc., "In-Memory Analytics: Leveraging Emerging Technologies for Business Intelligence," http://download.boulder.ibm.com/ibmdl/pub/software/data/sw-library/cognos/pdfs/ar_inmemory_analytics_leveraging_emerging_technologies_for_business_intelligence.pdf, 2009.

[14] J. Hagerty, R.L. Sallam and J. Richardson, "Magic Quadrant for Business Intelligence Platforms", Gartner, Inc., ID: G00225500, 2012.

[15] P.D. Haghighi, "The New Era of Mobile Decision Support Systems," Journal of Decision Systems, Vol. 22, No. 1, pp. 1-3, 2013.

[16] J. Heer, M. Bostock and V. Ogievetsky, "A Tour Through the Visualization Zoo," Communications of the ACM, Vol. 53, No. 6, pp. 59-67. doi :10.1145/1743546.1743567, 2010.

[17] J. Heer and S. Kandel, "Interactive analysis of big data," ACM Crossroads Vol. 19, No. 1, pp. 50-54, 2012.

[18] J. Heer and B. Shneiderman, "Interactive Dynamics for Visual Analysis," Communications of the ACM, Vol. 55, No. 4, pp. 45-54. doi:10.1145/2133806.2133821, 2012.

[19] Jaspersoft, "Seven Trends That Will Change Business Intelligence as We Know It," Retrieved on 01/12/2013 from: http://resources.idgenterprise.com/original/AST-0043754_Jaspersoft_eBook.pdf, 2011.

[20] Z. Jourdan, R.K. Rainer and T.E. Marshall, "Business Intelligence: An Analysis of the Literature," Information Systems Management, Vol., 25, pp. 121–131, 2008.

[21] S. Kandel, A. Paepcke, J.M. Hellerstein and J. Heer, "Enterprise Data Analysis and Visualization: An Interview Study," IEEE Trans. Vis. Comput. Graph, Vol. 18, No. 12, pp. 2917-2926, 2012.

[22] K. Lam and V.C. Lee, "On Consistent Reading of Entire Databases," IEEE Transactions on Knowledge and Data Engineering, Vol. 18, No. 4, 2006.

[23] A. Lonnqvist and V. Pirttimaki, "The Measurement of Business Intelligence," Information Systems Management, Vol. 23, No. 1, p.32, 2006.

[24] Y. Lu and K. Ramamurthy, "Understanding the Link between Information Technology Capability and Organizational Agility: An Empirical Examination," MIS Quarterly, Vol. 35, No. 4, pp. 931-954, 2011.

[25] S. Mithas, N. Ramasubbu and V. Sambamurthy, "How Information Management Capability Influences Firm Performance,"

MIS Quarterly, Vol. 35, No. 1, pp. 237-256, 2011.

[26] G. Narcisi, "AWS introduces Redshift 'big data' and business intelligence service," Retrieved on 04/24/2013 from: http://searchcloudprovider.techtarget.com/news/2240173984/AWS-introduces-Redshift-big-data-and-business-intelligence-service, 2012.

[27] Oracle Corporation, "Oracle Exalytics In-Memory Machine: A Brief Introduction," An Oracle White Paper, 2011.

[28] F. Payton and R. Handfield, "Strategies for Data Warehousing," MIT Sloan Management Review, 2004.

[29] D.J. Power, "Mobile Decision Support and Business Intelligence: An Overview," Journal of Decision Systems, Vol. 22, No. 1, pp. 4-9, 2013.

[30] N. Rahman, "Refreshing Data Warehouses with Near Real-Time Updates," Journal of Computer Information Systems, pp. 71-80, 2007.

[31] N. Rahman, "Measuring Performance for Data Warehouses - A Balanced Scorecard Approach," International Journal of Computer and Information Technology (IJCIT). Vol. 4, No 1, 2013, Pages, 1-7.

[32] N. Rahman, F. Aldhaban and S. Akhter, "Emerging Technologies in Business Intelligence," In Proceedings of the IEEE Portland International Center for Management of Engineering and Technology (PICMET 2013) Conference, San Jose, California, USA, July 28 - August 1, 2013, pp. 542-547.

[33] N. Rahman, "Temporal Data Update Methodologies for Data Warehousing," Journal of the Southern Association for Information Systems (JSAIS), Vol. 2, No. 1, pp. 25-41, Summer 2014. DOI: http://dx.doi.org/10.3998/jsais.11880084.0002.103.

[34] T. Ramakrishnan, M.C. Jones and A. Sidorova, "Factors influencing business intelligence (BI) data collection strategies: An empirical investigation," Decision Support Systems, Vol. 52, 2012, pp. 486–496.

[35] M. Ricknäs, "Big data not just about the analytics," Retrieved on 04/16/2013: http://www.computerworld.com/s/article/9224986/Big_data_not_just_about_the_analytics_says_Amazon_CTO, 2012.

[36] D. Robb, "Ten Great Mobile Business Intelligence Apps", http://www.enterpriseappstoday.com/business-intelligence/ten-great-mobile-business-intelligence-apps-1.html, 2011.

[37] E.A. Rundensteiner, A. Koeller and X. Zhang, "Maintaining Data Warehouses over Changing Information Sources," Communications of the ACM, Vol. 43, No. 6, pp. 57-62, 2000.

[38] D. Rutz, T. NelaKanti and N. Rahman, "Practical Implications of Real Time Business Intelligence," Journal of Computing and Information Technology (CIT), Vol. 20, No. 4, 2012.

[39] D.I. Sandu, "Operational and real-time Business Intelligence," Revista Informatica Economică, Vol. 3, No. 47, pp. 33-36, 2008.

[40] A. Sen and A.P. Sinha, "A Comparison of Data Warehousing Methodologies," Communications of the ACM, Vol. 48, No. 3, pp. 79-84, 2005.

[41] D. Spy, "5 Top Business Intelligence Tool Vendors According to IDC," Retrieved on 01/12/2013 from: http://www.enterprise-dashboard.com/top-5-business-intelligence-tool-vendors-2007/, 2007.

[42] D.M. Steiger, "Decision Support as Knowledge Creation: A Business Intelligence Design Theory," International Journal of Business Intelligence Research (IJBIR), Vol. 1, No. 1, pp. 29-47, 2010.

[43] V.C. Storey and R.C. Goldstein, "Knowledge-Based Approaches to Database Design," MIS Quarterly, Vol. 17, No. 1, pp. 25-46, 1993.

[44] S. Tabbitt, "Mobile Business Intelligence: Here At Last?" Retrieved on 04/25/2013 from: http://www.informationweek.com/software/business-intelligence/mobile-business-intelligence-here-at-las/240146333, 2013.

[45] D.M. Tank, A. Ganatra, Y.P. Kosta and C.K. Bhensdadia, "Speeding ETL Processing in Data Warehouses Using High-Performance Joins For Changed Data Capture (CDC)," 2010 International Conference on Advances in Recent Technologies in Communication and Computing, DOI: 10.1109/ARTCom.2010.63, pp. 365-368, 2010.

[46] TechAmerican Foundation, "Demystifying Big Data: A Practical Guide To Transforming the Business of Government," Retrieved on 04/16/2013 from: http://www.techamerica.org/Docs/fileManager.cfm?f=techamerica-bigdatareport-final.pdf, 2012.

[47] Vertica Systems Inc., "Transforming the Economics of Data Warehousing with Cloud Computing," Retrieved on 01/20/2013 from http://www.vertica.com/wp-content/uploads/2011/01/CloudTransformsEconomicsOfDataWarehousing-Vertica.pdf, 2008.

[48] D. Vesset, "Competitive Analysis: Worldwide Business Intelligence Tools 2010," IDC Analyze the Future, Retrieved on February 4, 2012 from: http://www.sas.com/news/analysts/103115_0611.pdf, 2011.

[49] H.J. Watson, "Tutorial: Business Intelligence – Past, Present, and Future," Communications of the Association for Information Systems, Vol. 25, No., p. 39, 2009.

[50] H.J. Watson, B.H. Wixom, J.A. Hoffer, R. Anderson-Lehman and A.M. Reynolds, "Real-Time Business Intelligence: Best Practices at Continental Airlines," Information Systems Management, Vol. 23, No. 1, pp.7-18, DOI: 10.1201/1078.10580530/45769.23.1.20061201/91768.2, 2006.

[51] W. Weill, M. Subramani and M. Broadbent, "Building IT Infrastructure for Strategic Agility," MIT Sloan Management Review, 2012.

[52] J. Widom, "Research Problems in Data Warehousing," In Proceedings of the 4th Int'l Conference on Information and Knowledge Management (CIKM), 1995.

[53] B.H. Wixom and H.J. Watson, "An Empirical Investigation of the Factors Affecting Data Warehousing Success," MIS Quarterly, Vol. 25, No. 1, pp. 17-44, 2001.

[54] I. Yermish, V. Miori, J. Yi, R. Malhotra and R. Klimberg, "Business Plus Intelligence Plus Technology Equals Business Intelligence," International Journal of Business Intelligence Research (IJBIR), Vol. 1, No. 1, pp. 48-63, 2010.

Nayem Rahman is a Senior Enterprise Application Developer in IT Business Intelligence (BI), Intel Corporation. He has implemented several large projects using data warehousing technology for Intel's

mission critical enterprise DSS platforms and solutions. He is currently pursuing a Ph.D. in the Department of Engineering and Technology Management, Portland State University, USA. He holds an M.S. in Systems Science (Computer Modeling & Simulation) from Portland State University, Oregon, USA and an MBA in Management Information Systems (MIS), Project Management, and Marketing from Wright State University, Ohio, USA. His most recent publications appeared in Proceedings of the IEEE 26th Canadian Conference of Electrical and Computer Engineering (CCECE 2013) and the International Journal of Computer and Information Technology (IJCIT). His principal research interests include Big Data Analytics, Active Data Warehousing, Data Mining for Business Intelligence, Intelligent Data Understanding using Simulation, and Simulation-based Decision Support System (DSS).

Dale Rutz is a BI Solution Architect in Supply Chain IT. She has been developing software at Intel Corporation for 23 years. Her work has involved all facets of software development including ETL, integration and presentation layer using technologies such as SQL, JAVA, UNIX, C, XML and various proprietary protocols. Ms. Rutz holds an MBA from Santa Clara University and a BS from San Jose State University in MIS and Math. She completed the APICS CSCP (certified supply chain professional) in December 2008. Her focus is on harnessing the power of information.

Shameem Akhter is an Information Technology (IT) Professional. She holds an M.S. in Management and Information Systems (MIS) from Western Oregon University, USA. She had been selected by Western Oregon University (WOU) faculty and staff committee for the Who's Who among Students in American Universities and Colleges recognition for 2011-2012. The committee selected her from a nominated pool of over 900 students to be recognized for her outstanding leadership, service, and scholarship at WOU. Her most recent publications on IT sustainability and data warehousing appeared in the International Journal of Technology Management & Sustainable Development (IJTMSD) and the Journal of Computing and Information Technology (CIT) respectively. Her research interest includes Database Systems, Data Warehousing, Decision Support System, and Information Systems Implementation.

Fahad Aldhaban is pursuing his Ph.D. in the Department of Engineering and Technology Management, Portland State University, USA. He holds an M.S. in Engineering and Technology Management from Portland State University, Oregon, USA, an M.S. in Management and Information System (MIS) from Fairleigh Dickinson University, New Jersey, USA and a B.S. from Al Iman Muhammad Ibn Saud University, Saudi Arabia. He worked as a section manger in Saudi Telecommunications Company (STC) for five years. He published a number of papers including, Exploring the adoption of smartphone technology: literature review', 'Adoption & evaluation of personal health record (PHR) system' and 'Exploring the adoption of smartphone technology: literature review'. His most recent publication appeared in Proceedings of the IEEE Portland International Center for Management of Engineering and Technology (PICMET 2013) Conference. His research interest includes Technology Assessment, Technology Adoption, Quantitative Data Analysis, and Technology Roadmaping.

Poor Academic Achievement of University Students: Problems and Solutions

Md Kabirul Islam[1], Yousuf M. Islam[2], Mohammed Shamsul Hoque[3]
Daffodil International University, Dhaka, Bangladesh
kislam@daffodilvarsity.edu.bd[1];ymislam@daffodilvarsity.edu.bd[2];hoque-eng@daffodilvarsity.edu.bd[3]

Abstract— Poor academic achievement is a frustration for students and a concern for the teachers and university management. Usually, this aspect is seen as the responsibility of the students, and hence less attention is paid to this issue until it becomes serious. We have conducted a study to investigate the reasons for poor academic performance from students' perspectives and encouraged students themselves to identify solutions to the perceived problems. A day long participatory workshop was conducted for each of the three groups of students selected from the Department of Software Engineering, Department of English and the Department of Law for this purpose. A questionnaire was administered at the beginning of the workshop to both collect basic background data as well as sensitize students to the purpose of the workshop. Students' perceived problems were collected and classified using anonymous idea cards with the students working in pairs. Students' engagement with social media for entertainment competes with study time, lack of English language skills and inexperienced teachers were the major perceived problems that impede the academic performance. Students working in collaborative groups also offered solutions to these problems as detailed in the paper.

Keywords— Academic Achievement, Motivation, Social Media, participatory data collection

©University of Liberal Arts Bangladesh
All Rights Reserved

Manuscript received on 21 August 2014 and accepted for publication on 19 September 2014.

1 INTRODUCTION

ACADEMIC achievement or performance is the outcome of teaching-learning methodologies – the extent to which a student achieves his/her goal is commonly measured by examinations or continuous assessment (Ward, Stoker, & Murray-Ward, 1996).

Other assessment options may be assignments, presentations, production of visual outcomes, debates, critiques, etc. The assessment alternatives are set by the universities or academic institutions especially in higher education. In the existing semester system which is a practice of many countries, the undergraduate students, in a four-year program, are awarded a Grade Point Average (GPA) at the end of each semester on the basis of the grades awarded in the courses taken by the students during the semester. After completion of the four-year program, students' are awarded a degree depending on the Combined GPA. A lot of research has been conducted into poor academic performance and the factors associated with it in the developed country context. Unfortunately, it is very hard to find studies conducted in developing countries. The present study was conducted in a private university in Bangladesh. In the spring semester of 2014, about one-third students obtained poor academic grades. This issue was discussed in several forums of the university with concern. As university teachers, we realized the urgency for investigating the reasons behind the poor academic achievement of our students which was alarming for the academic and admin community of the university. The study was conducted in the summer semester of 2014 to find out barriers and identify possible solution. To situate the work presented, the following section is a review of literature on factors related to the academic achievement of students.

2 RELATED WORKS

Most of the literature presented in this section is based on findings of empirical studies conducted in developed countries for a long duration.

In the present world of communication technology, students have a serious affinity for content on the Internet and social networking. A good number of researches show that students spend lot of hours on social networking sites like Facebook, Twitter, personal blogs, etc., for entertainment. Paul, Baker, & Cochran (2012) commented that online social networks have permeated all generations of Internet users. These social networking sites are transforming a prominent communications tool, particularly, in the student community. As a result, academic institutions and faculty are increasingly using

social networking sites, such as Facebook and LinkedIn to connect with the current and potential students and often to deliver instructional contents. This has led to raise many questions about the impact of online social networking on academic performance and the possibility of using it as an effective teaching tool. The researchers found that there is a statistically significant negative relationship between time spent by the students on the social networking and their academic performance. Similarly, the study conducted by Rouis, Limayem & Salehi-Sangari (2011) indicated an extensive use of Facebook by the students with extraverted personalities leading to poor academic performance. However, students who are more self-regulated, have shown to have effectively controlled their engagement on these platforms. This finding is an indication of an awareness of students about negative impact of using social networking. So, students must understand the proper use of social media. Teachers have responsibilities to motivate students to use social media mainly for their learning and interaction with their peers. Another study also found a negative and statistically significant impact of Internet hours on grade performance (Englander, Terregrossa, & Wang, 2011), suggesting that the distractive dimensions of Internet use outweigh the productive dimensions. Despite some academic benefits, it is seen that most media is regarded as a source of amusement but it serves as a distraction and impediment on academic achievement (Davis, Deil-Amen, Rios-Aguilar, & Gonzalez Canche, 2012).

Despite time on social networking, several factors are found to be responsible for low academic performance. According to Hansen (2005) the factors affecting the achievement that can hamper success, such as, (1) being enrolled in less rigorous and challenging academic courses; (2) having under-prepared, less experienced teachers; and (3) facing low teacher expectations and possible discrimination. The researchers provided several suggestions for improving their education opportunities which include (1) Teacher Quality and Professional Development; (2) Teacher Expectations; (3) Extended Learning Time; (4) Parent and Community Support; (5) Social Support; (6) A Rigorous Curriculum; (7) Knowledge about and Access to Higher Education; and (8) Learning Resources. Increase in enrollment, university admission policies, counseling, study skills, study facilities, and financial policies and practices are things that affect adult students (Beagle, & Melnyk, 1971). In case of adult and professional students, work responsibilities, study skills, and unclear goals are the most frequently cited general factors affecting studies (Olson, 1990).

Many studies including (Keller, 1978) show that students themselves perceived greatest responsibility for their low grades on their own lack of motivation, proper study habits, and attention to assigned work. In Keller's study many students felt that institutional or environmental factors, such as, university and divisional requirements, faulty teaching and examination procedures, residence hall atmosphere, background in English, and the quality of academic advice also contributed to their problems. Students also found that problems in time management impeded their studies but pre-set schedules enhanced them. In addition, social support, self-regulation skills (Rytkonen, Parpala, Lindblom-Ylanne, Virtanen, & Postareff, 2012) curriculum, learning environment and classroom interactions (Grayson, 1985) are perceived to be important for academic achievement. Becerra (2012) examined the factors affecting the perceptions of barriers in academic achievement of university students and found that higher levels of income, education, and linguistic acculturation were associated with the perceived barriers in education. However, Romanik (2010) reported low income children obtained poor grades which is contradictory to the findings of Becerra (2012).

3 METHODS

The objectives of the study were to identify the reasons of poor academic performance of the students in a developing country and in particular students enrolled at a private university. The purpose was to get the students to do collaborative group work to solve their own perceived problems. The participants for this study were selected from different departments who obtained poor grades in spring semester of year 2014.

The emphasis was on getting the students to document perceived problems on individual idea cards. They did this after discussing their problems with their partners and honing down their problems into key phrases. After this exercise, cards were collected by student volunteers, read out and displayed on the whiteboard. After visually displaying all the cards, the students collectively group or classify the cards under suitable headings. The class is then divided into the same number of groups as represented by the classified cards. The groups then work collaboratively to collectively come up with solutions which they present to the rest of the class. Each group has not only to present but to defend their ideas presented. To carry out these objectives, we

conducted three workshops on three different dates for the students of Software Engineering (37), Law (20) and English (21). The same workshop techniques were used for a total of 78 students. The techniques of conducting the workshops are elaborately described below:

1. As the students arrived for the workshop, they were given a questionnaire to fill up. The questionnaire collected basic data on their background, their motivation for attending tertiary level education and whether it was important to achieve a good CGPA when leaving the university.
2. Students were asked whether they were aware of the purpose for which they were attending the workshop. They were then given a briefing on the purpose of the workshop and asked what they wished to achieve by attending the workshop.
3. Students were then paired. The last three members were made into a small group. Every pair was asked to discuss reasons behind their poor performance. As they were discussing, 3″ x 5″ cards and markers were handed out. Once they had firmed up their ideas, they were to write down the idea using keywords – one idea per card. They were asked not to put their IDs or names on the cards. They could therefore express their ideas without being identified. This created a comfort zone and allowed the students to be free and frank. The students were given freedom on the number of cards they wished to write.
4. Two volunteers were requested from the class. The volunteers were asked to collect the completed cards. Once everyone had finished, the class was asked to welcome the volunteers. One volunteer showed and read out each card. The other volunteer took the read out card and using draftsman tape fixed the card to the white board.
5. The class was then asked to study all the cards and group similar ideas into individual columns. Once the cards were in different columns, the class was asked to give suitable Title cards. After putting the title cards, additional volunteers were asked to summarise each category/column.
6. The number of columns range from 4 to 7. After thanking the volunteers the class is randomly divided into the same number of groups as there are columns. Each group is then given the task of solve the problems of one category. The groups disperse into different corners of the classroom to brainstorm collaboratively and design a presentation on a yellow poster paper of size 2′ x 3′. As the groups work, the facilitator individually listens in to the ideas of each group and check whether they have understood the assignment.
7. As each group finishes, they display their posters using draftsman tape. Finally, each of the groups made their group presentations. The other groups were allowed to ask questions which the presenting group defended, added ideas or modified the ideas put forward. The students were free to use either Bangla (the mother tongue) or English or a mixture of both – whatever made them feel comfortable.

Each of the three workshops was conducted in the same manner. The problems and solutions received from three workshops were analyzed. Qualitative analysis of data was done. This included coding and categorizing of the reasons.

4 Results and Discussions

Different groups of students (SWE, Law, and English) reported different reasons but they fall in the same category of problems. The 37 students (8 female and 29 male) of the Department of Software Engineering (SWE) reported different reasons responsible for poor academic performance. The reasons given by the students were coded and categorized. These are listed in the tables that follow.

TABLE 1

CATEGORY OF PROBLEMS AND SUMMARY OF REASONS OFFERED BY SWE STUDENTS

Category of problem	Reasons
Unclear course goals	Confused about the career of a Software Engineer; No interest in study
Lack of motivation	Late presence in early morning classes, reluctant to study daily
Improper use of social media	Busy with browsing Facebook, watching movie,
Lack of confidence	Fear of study , Less concentration in class, Lack of self- confidence
Time management	Duration of semester is too short to understand several courses properly
Lack of English skill	Fear to speak in English, Lack of writing skill in English
Inexperienced teacher	Students have to memorize everything, Lack of guidelines, Only power point presentation makes boring

The students gave their opinions at the end of the session. The students' preferred practical orientation and activity based lessons and more tasks in the laboratory, innovative teaching method, especially, in English and Math so that they can practice and learn. They also proposed hand out from the teachers in some courses. The opinions given by the students indicate that there is lack of an appropriate learning environment in the class, findings which agree with Grayson (1985) and absence of interaction between students (Becerra, 2012). These aspects are important, especially, for improving their English language Skills (Keller, 1978; Becerra, 2012).

The 20 students (3 female and 17 male) of the Department of Law reported their reasons for poor academic performance. These are given in Table 2.

TABLE 2

CATEGORY OF PROBLEMS AND SUMMARY OF REASONS OFFERED BY THE STUDENTS OF LAW

Category of problem	Reasons
Unclear course goals	Don't understand the topics, confused about the subject matter
Lack of motivation	Irregular in class, irregular in studying daily at home or hostel; as a result forget the topic taught, No concentration on study, They are not interested in study but always think about the ways of developing their business,
Improper use of social media	Spending time for using social media, such as, facebook
Lack of confidence	Students reading but at the time of exam, they have a fear of writing, Students feel themselves as helpless
Lack of English skill	Fear to speak in English; Don't know how to start writing in English after reading a paragraph, Everything is understandable but problems in understanding English , Can't express clearly when writing the topic
Inexperienced teacher	Lectures of some of the early semesters in university are difficult for students to understand
State of low income	Facing financial problem as family cannot support the study, Facing personal and family problems
Study skills	Students not having problems in understanding during class, but when they started studying, they faced lots of problems.

Comparing the responses with those of Table 1, we see that the 'time management' category is absent in table 2 but two new categories 'state of low income' which agree with the findings of Romanic (2010) and study skills (Beagle & Melnyk, 1971; Keller, 1978; Olson, 1990). The undergraduate students of the university come from different rural areas. So, they may have problems with the study habits and to adjust with the university and

residence/hall atmosphere (Keller, 1978). The students suggested for more activities and interactions in the classroom which are important aspects for improvement of academic performance (Grayson, 1985).

The 21 students from English Department participated in the workshop. The reasons given by these students are given in Table 3.

TABLE 3: CATEGORY OF PROBLEMS AND SUMMARY OF REASONS OFFERED BY THE STUDENT OF ENGLISH

Category of problem	Reasons
Lack of motivation	Students are not concentrating on the class due to a poor speaker, lack of seriousness, Students are not attentive in class, irregular in classes,
Improper use of social media	Spend time for using social media and internet
Lack of confidence	Fearing to ask any questions to the teacher, fearing to speak out,
Lack of English skill	Poor grammar skills, poor in speaking English, weak in writing skills, lack of confidence in using the English language, spelling problem, delivery of the class lecture is in English,
Inexperienced teacher	Classroom is not active, can't understand the class lecture properly, teachers are not influential and friendly,
Time management	Students spend maximum time with their friends gossiping, Students mostly utilize their time in sleeping, eating, taking shower and talking,
Study skills	Can't prepare themselves instantly inside the class, Students having a less memorizing power and forget everything while writing, Students are not studying regularly at residence,

It is found that 'unclear course goal' and 'state of low income' categories are absent in the reasons given by the students of English department. Similar to other two groups, these students demanded for more activities in the class.

From table 1, table 2 and table 3, it is evident that out of nine categories of problems, five categories are common in all the three groups. These are use of social media, lack of English language skills, lack of motivation, lack of confidence, and inexperienced teachers. Other categories are unclear course goals, time management, study skills and state of low income. The problems related to the university administration, poor teaching quality, curriculum design are not elements of students' problems. However, these problems affect students' learning. In relation to use of social media, it is very hard to find a student at the university level who does not use social media. The data collected from students indicates that all participants use social networking sites, especially, facebook for a duration of one to four hours daily. It is also perceived from discussion in the class that students spend time at night on the facebook instead of doing personal study. Due to academic pressure, they may find the social media as entertainment and prominent communication tools (Paul, Baker, & Cochran 2012) for discussing and completing assignments but extensive use of it serves as a distraction and impediment on academic achievement (Rouis, Limayem & Salehi-Sangari,2011; Englander, Terregrossa, & Wang, 2011; Davis, Deil-Amen, Rios-Aguilar, & Gonzalez Canche, 2012; Paul, Baker, & Cochran 2012). So, counseling and guidance (Beagle, Melnyk, 1971) is necessary to protect the students from improper and destructive use of social media. This may help develop students' self regulated skills (Rytkonen, Parpala, Lindblom-Ylanne, Virtanen, & Postareff, 2012) and lead to use this media for out of class academic help and solving problems which is a solution given by the students themselves. In doing so, students may be able to do time management (Keller, 1978) properly and develop their good study habits.

Lack of English language skills (Becerra, 2012) is a common problem for the students who are not native English speakers. The medium of textbooks used is English. Although the medium of instruction of our higher education is English, the students cannot conform to the situation because of poor English language skills that they acquired during their previous education. So, creating an appropriate learning environment (Grayson, 1985) inside and outside the class in the university is crucial where students can practice English through interaction, group discussion, communication, and academic writing competitions. The students gave their opinion for creating such an environment for improvement of their English Language skills. It will

increase their level of confidence for expressing ideas that they have.

Teachers should be the driving force of a university and facilitators for achievement of course goals. However, under-prepared and inexperienced teacher (Hansen, 2005) cannot fulfill expectation of the students and considered as a reason for poor academic performance. It is mandatory for the teachers to make students understand their course goals (Oslon, 1990) which is found as a barrier to their better academic performance. Understanding course goals and career path are important for the students for their motivation (Keller, 1978) towards study. The data shows that the students expected caring, inspiring, and friendly teachers who can facilitate (Savery, 2006) their learning more efficiently and help obtain higher academic grades in the exam.

On the basis of the above discussions, the data from the students and our experience of dealing with the students' the problems and solutions related to the poor academic performance of university students are presented in figure 1.

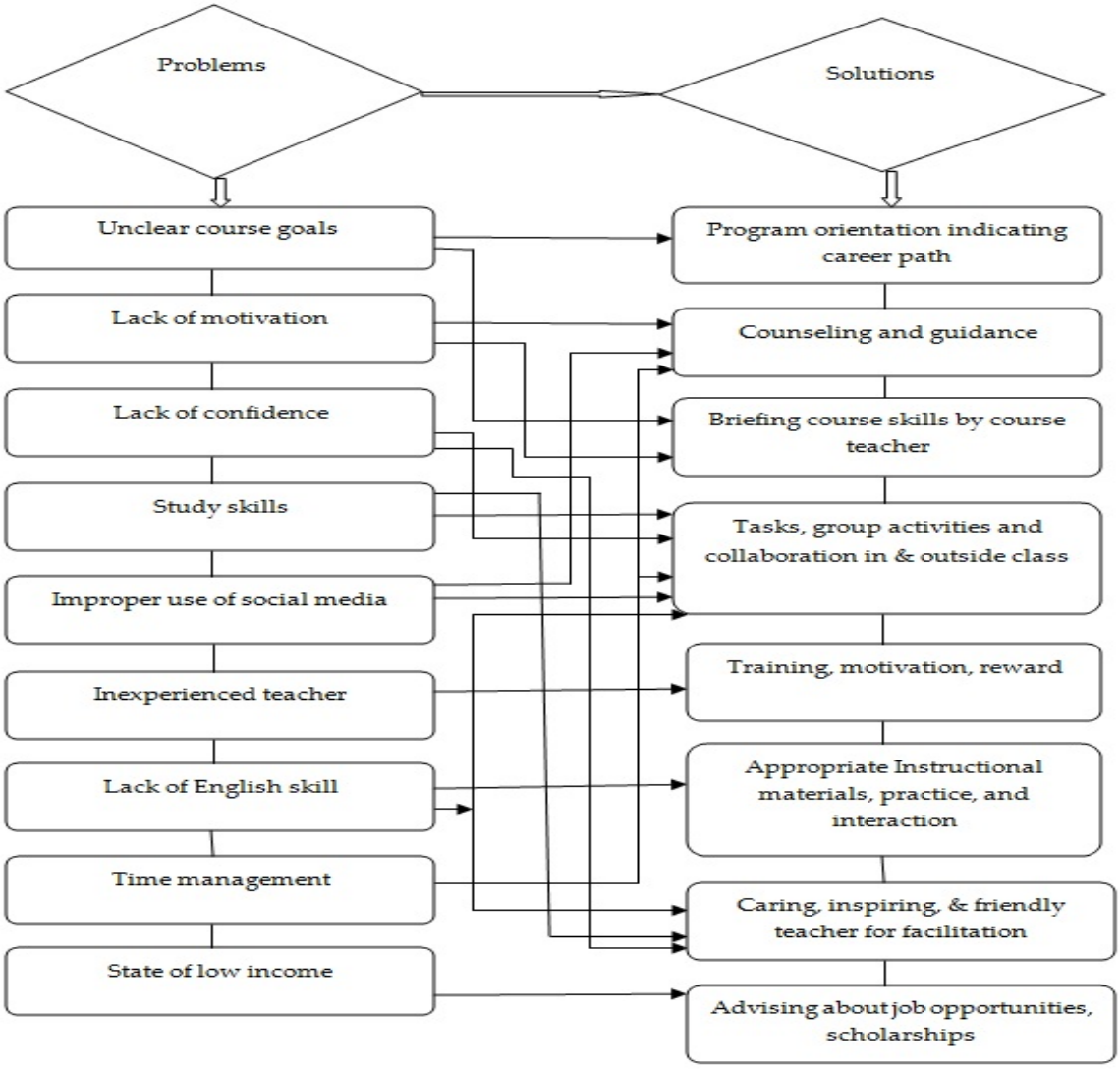

Figure 1. Problems and corresponding solutions of poor academic performance

It is obvious from figure 1 that students themselves can be their own resources and can solve several problems if they involve in activities and work collaboratively inside and outside the class on given tasks. However, the main responsibility is imposed on the course teacher who plans and facilitates their learning (Islam & Vale, 2012). It is also important for the teachers to let students understand the course goals and the skills that they can acquire after completion of the course in order to motivate and increase level of confidence of the

students. Additionally, the teachers may plan and motivate the students to use the social media for doing their assignments, solving problems and group interactions instead of destructive use of it (Davis, Deil-Amen, Rios-Aguilar, & Gonzalez Canche, 2012). Creating an appropriate teaching and learning environment imposed on the university management, teachers, and relevant

4 Conclusion

The study discerns the reasons for poor academic performance of university students and solutions to the problems from students' perspectives. Use of social media by the students, lack of English language skills and inexperienced teachers are found the most prominent barriers to academic performance. It is evident that the faculty, administrative authority and the Head of the department have much to do for improvement of this situation. The learning goals must be made clear to the students with a focus to students' employment skills. Additionally, proper counseling and guidance should be done for motivation, development of the study skills along with a student-centered teaching and learning environment in the class. So, the main obligations for solving students' problems imposed on the university management, teachers and Heads of the Departments. The study has also revealed that the students use social media daily for a long time. So, a more detailed study is necessary to find the relationship between hours spend by the students on the social media and their academic performance.

All students of the university are offered two compulsory courses of English I and English II. Studying effectiveness of these two courses in terms of improving their English language is another important area for further research.

References

[1] Beagle, P., & Melnyk, W. T. (1971). Factors Affecting Academic Achievement of Adult Students, '*Continuous Learning*', 10 (2), 71-78.

[2] Becerra, D. (2012). Perceptions of Educational Barriers Affecting the Academic Achievement of Latino K-12 Students, '*Children & Schools*', 34 (3), 167-177.

[3] Davis, C. H. F., Deil-Amen, R., Rios-Aguilar, C., Gonzalez Canche, M.S., (2012). Social Media in Higher Education, '*The Center for the Study of Higher Education at the University of Arizona and Claremont Graduate University*', Arizona.

[4] Englander, F., Terregrossa, R. A., Wang, Z. (2011). Internet Use among College Students: Tool or Toy?, '*Educational Review*', 62 (1), 85-96.

[5] Grayson, D. S. (1985). Implementing the Gender Expectations and Student Achievement (GESA) Teacher Training Program, '*Paper presented at the Annual Meeting of the American Educational Research Association*', Chicago.

[6]

[7] Hansen, A. L. (2005). Hispanic Student Achievement: Research Brief, '*Education Partnerships Inc*', PP 10

[8] Islam, M. K. & Vale, C. (2012). 'The Teacher's Role in Promoting Online Peer group Learning', *International Journal of Information and Communication Technology Research*, 2 (1).

[9] Keller, M. J. (1978). Factors Affecting the Poor Academic Achievement of First-Term Freshmen at Miami (University), '*Survey Report*', Miami University, Oxford.

[10] Olson, M. A. (1990). Characteristics of Students on Academic Probation. '*Community/Junior College Quarterly of Research and Practice*', 14 (4), 331-336 .

[11] Paul, J. A., Baker, H. M., & Cochran, J. D. (2012). Effect of online social networking on student academic performance, '*Computers in Human Behavior*', 28 (6), 2117-2127.

[12] Romanik, D. (2010). Out-of-School Factors Affecting Academic Achievement, '*Information Capsule*', Research Services, Miami-Dade County Public Schools, Volume 1004, PP17

[13] Rouis, S., Limayem, M., & Salehi-Sangari, E. (2011). Impact of Facebook Usage on Students' Academic Achievement: Role of Self-Regulation and Trust, '*Electronic Journal of Research in Educational Psychology*', 9 (3), 961-994.

[14] Rytkonen, H., Parpala, A., Lindblom-Ylanne, S., Virtanen, V., & Postareff, L. (2012). Factors Affecting Bioscience Students' Academic Achievement, '*Instructional Science: An International Journal of the Learning Science*', 40 (2), 241-256.

[15] Savery, J. R. (2006). Overview of problem-based learning: Definition, and Distinctions, '*Interdisciplinary Journal of Problem-based Learning*', 1 (1), 9-20.

[16] Ward, A., Stoker, H. W., & Murray-Ward, M. (1996). Achievement and Ability Tests - Definition of the Domain, '*Educational Measurement 2*', University Press of America, pp. 2–5.

Md Kabirul Islam is a Professor of Multimedia and Creative Technology Department of Daffodil International University, Dhaka, Bangladesh. Prior to this position, he had been a teacher of Computer Science and Engineering (CSE) Department of this university. He holds a PhD degree from an Australian University in 2003. Dr Islam has a good number of publications in the area of E-learning, E-commerce, Multimedia Technology, and Social Constructivism. He is a member of several national and international organizations.

Yousuf M. Islam achieved a PhD degree from Strathcly de University, Glasgow, UK in 1988. He started his teaching profession in 1978 from the Department of Applied Physics and Electronics, Dhaka University. As a workshop facilitator Professor Islam has conducted workshops in Berkeley, Kuala Lumpur, Penang, Katmandu, Chennai and Manila. He has thus become a facilitator of international repute. To improve his participatory teaching methods, he recently completed a second Master's degree on Instructional Design and Technology from Malaysia. He has developed multiple training manuals for his training programs and most recently was invited by Sampoerna School of Education, Indonesia to develop an instructionally designed course on Human Performance Management. He has developed interest in how Social Media tools like blogs and Facebook can be used to support learning of disadvantaged students at tertiary level. He is currently Professor, Department of Software Engineering, and Executive Director of Human Resources Development Institute (HRDI) at Daffodil International University.

Mohammed Shamsul Hoque is a Qualified EFL/ESL teacher with TEFL/TESOL qualifications including the Cambridge CELTA and in Masters in TEFL from the University of Wales, UK. He was a former Lecturer in English at Carmichael University College, Rangpur and TESOL Tutor at International House, London. He taught English to a wide range of students from Young Learners to Graduation &Post-Graduate levels. He has been teaching English language and literature at the Daffodil International University, Dhaka, Bangladesh, since January, 2013. Currently, pursuing a Doctoral Degree on CLT in Bangladesh from the OUM, Malaysia.

An Efficient Modification to Playfair Cipher

[1]Md. Ahnaf Tahmid Shakil and [2]Md. Rabiul Islam
[1] Department of Computer Science & Engineering, University of Information Technology and Sciences, Bangladesh, at.shakil@yahoo.com
[2] Department of Computer Science & Engineering, Rajshahi University of Engineering & Technology, Rajshahi-6204, Bangladesh, rabiul_cse@yahoo.com

Abstract— Playfair is one of the best-known traditional ciphers but it is limited from different aspects. This paper deals with some of its limitations and extensibilities. Proposed modification uses a 7 × 7 matrix with a matrix randomization algorithm to extend the data holding capability and security at the same time. Some limitations like I/J inconsistency and padding character ambiguity is eliminated. According to the performed cryptanalysis, this modification is stronger than playfair.

Keywords— Algorithm Enhancement and Optimization, Classical Cryptography, Computational Algorithm, Cryptography, Polyalphabetic Cipher, Private-key Encryption

© University of Liberal Arts Bangladesh
All rights reserved.

Manuscript received on 19 July 2014 and accepted for publication on 24 August 2014.

1 Introduction

CRYPTOGRAPHY is the study of mathematical techniques related to aspects of information security such as confidentiality, data integrity, entity authentication, and data origin authentication [1]. It discusses about a set of techniques, Encryption is one of them. One of the primitive purposes of data and information is to interact with it via various communication channels. These channels are not always authentic. Information or data must be masked before the communication is initiated to assure confidentiality. The process of masking data before transmission through communication channel is encryption, though purposes of encryption may differ. Most of the cryptosystem follows a generic structure to encipher and decipher data. It involves plaintext, ciphertext, encryption algorithm, decryption algorithm and key [2].

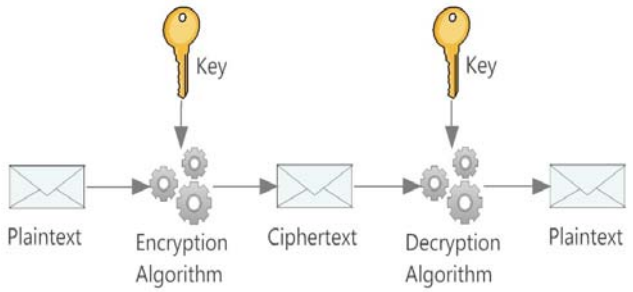

Figure 1: General structure of cryptography.

According to the structure, encryption and decryption uses two different algorithms which may use either identical or different keys. Based on the usage of key, encryption may be categorized into two distinct sections – symmetric or private key encryption and asymmetric or public key encryption [3]. Symmetric encryptions can be block ciphers or stream ciphers.

2 The Playfair Cipher

Playfair is a symmetric polyalphabetic encryption system that uses block substitution. It was invented by Charles Wheatstone in 1954 but implementation was popularized by Lord Playfair [4], [5]. This cipher was also used as a British field cipher [6]. Playfair cipher uses a 5 × 5 matrix which is shown in table 1.

TABLE 1
A PLAYFAIR MATRIX

K	E	Y	W	O
R	D	A	B	C
F	G	H	I/J	L
M	N	P	Q	S
T	U	V	X	Z

The matrix is constructed by choosing a keyword from which duplicate characters are removed and placed in the matrix. Then the rest of the empty spaces are filled with remaining characters by following an alphabetic order. Consistency with English alphabet is kept by putting any two characters in a single entry (Traditionally, these characters are I and J). Then plaintext is considered as a construction of two character blocks. A plaintext with odd length is normalized by appending a padding character at the end. Each block is substituted by following the rules below:

- If both characters are same, a filler character e.g., x is added after the first character.

- If both characters are on the same row of the matrix, they are replaced by their immediate next with the first element of the row circularly following the last.

- Two characters that are on the same column are replaced by the character beneath them with the top element of the row circularly following the bottom.

- Two characters when neither on the same column or on the same row, replaced by the character on its row that intersects another character by column.

For every possible key there is different number of matrix arrangements. So, for 25 letters, a permutation of 25 (which is approximately 10^{25}) number of possible matrix can be generated [7]. Also, with 26 letters there is a possibility of 676 digrams, which was considerably secure for the time when playfair invented. But, with the change of time, different cracking method arisen, some of which doesn't even require technical device and can be solved by pencil and paper [8].

3 PROPOSED MODEL

In the proposed model, a 7 × 7 matrix is considered for extended character support and additional features. Primarily, the matrix supports 49 characters. But, the model uses 47 of them for general purpose and 2 for special purpose. The character set includes 26 lower-case letters, 10 numerals, 10 most frequently used punctuation marks and a whitespace character. The two remaining characters serve exclusively as a filler character and a padding character. This two particular character are not eligible to participate in plaintext or keyword. During decryption they are omitted. They eliminate the existing ambiguity in playfair that couldn't resolve the following scenarios:

- *Scenario 1:* A substitution pair includes identical characters and each character in the pair is filler character. For example, if 'X' is a filler character, then according to conventional playfair algorithm, pair 'XX' will be replaced by 'XXX', which, in turn, will create ambiguity. And according to the cryptanalysis by Michael J. Cowan, this is a potential source of exposure of plaintext structure [8].

- *Scenario 2:* Plaintext has odd number of characters. A plaintext with odd length is processed by appending a padding character. But decryption algorithm has no clue, whether that particular last pair uses a padding character or not.

Similar algorithm exists that uses dedicated characters to reduce these ambiguity [9].

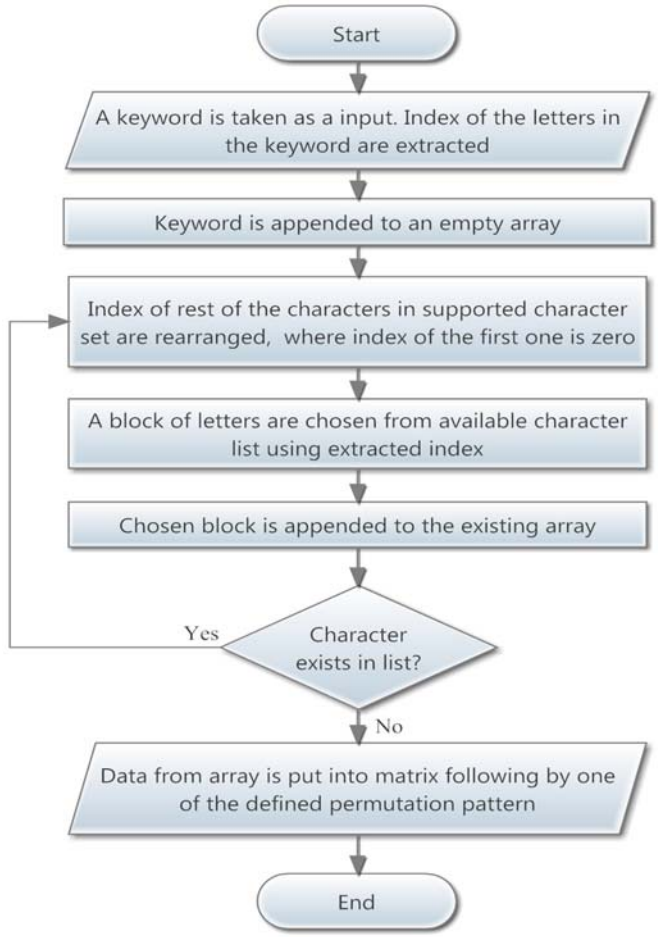

Figure 2: Data flow diagram of matrix construction.

In the matrix construction phase, following steps are applied:

- A character set (C.S.) is considered which is composed of all 49 supported characters.

- Every character in C.S. possesses a temporary index number. And, the character groups follow an indexing hierarchy. In the primary state, it appears like as table 2.

TABLE 2
PRIMARY INDEXING OF CHARACTER GROUPS

Groups	Characters	Index Range
Alphabets	26	0 – 25
Numerals	10	26 – 35
Punctuations	10	36 – 45
Whitespaces	1	46 – 46
Filler and Padding	2	47 – 48

- An array is considered where characters are temporarily stored before putting in the matrix. It is primarily empty.
- First, a keyword is chosen, which is a composition of valid letters in C.S. (excluding padding and filler character).
- Index list of keyword characters (I.K.) is calculat-

ed. Then, Keyword is placed in the empty array.

- Then, C.S. is rearranged by removing characters that are already in the array. C.S. is also re-indexed in a way that, index of the first character is 0; later one is 1 and so on.
- Now, a block of characters is extracted from C.S. by using I.K. If any character of referred index is not available, it is simply ignored.
- The extracted characters are appended to the array.
- This extraction and appending process iterates until there is no character left in C.S. (Fig. 2 provides an explicit view on the process).
- Finally, data from array is placed in the matrix by following a matrix permutation pattern (3.2).

Once the matrix construction is complete, plaintext data blocks are substituted using the same principle as 5 × 5 playfair algorithm.

3.1 Example

Consider a keyword K = "ace". K contains 3 characters. Also, consider C.S. which consists of punctuations in the list ['(', ')', '$', '&', '+', ',', '/', ':', ';', '='], C.S. is in primary state and using '!' as filler character and '~' as padding character. Table 3 shows the indexing of C.S. for primary state.

TABLE 3
INDEXING OF C.S. IN PRIMARY STATE

Char.	a	b	c	d	e	...	!	~
Index	0	1	2	3	4	…	47	48

First, index of K is calculated. So, index(K) = [0, 2, 4]. Let, A is an empty array. After appending characters from K, A = ['a', 'c', 'e'].

Now, C.S. is rearranged by removing characters in A and re-indexed, which is shown in table 4.

TABLE 4
INDEXING OF C.S. AFTER A REARRANGE AND RE-INDEXING OPERATION

Char.	b	d	f	g	h	...	!	~
Index	0	1	2	3	4	…	44	45

Then, a block of characters ['b', 'f', 'h'] is extracted from C.S. by using index(K). Characters are appended to array. Now, the array, A = [a, c, e, b, f, h]. This way, all the characters are extracted. Finally, A = ['a', 'c', 'e', 'b', 'f', 'h', 'd', 'i', 'k', 'g', 'l', 'n', 'j', 'o', 'q', 'm', 'r', 't', 'p', 'u', 'w', 's', 'x', 'z', 'v', '0', '2', 'y', '3', '5', '1', '6', '8', '4', '9', ')', '7', '$', '+', '(', ',', ':', '&', ';', ' ', '/', '!', '=', '~']

Now, applying a spiral pattern (direction: clockwise, starting point: upper-left edge) on data in A, we get the matrix which is shown in table 5.

TABLE 5
GENERATED MATRIX FOR KEYWORD "ace" IN A SPIRAL PATTERN CONFIGURATION

a	c	e	b	f	h	d
z	v	0	2	y	3	i
x	(	,	:	&	5	k
s	+	=	~	;	1	g
w	$	!	/		6	1
u	7	)	9	4	8	n
p	t	r	m	q	o	j

Encryption: Plaintext "aa"

Step1: Plaintext processing –

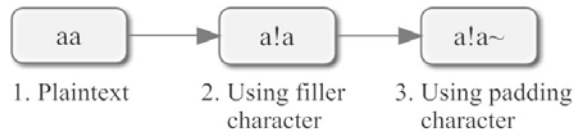

Step 2: Block substitution -

a! → *ew*

a~ → *bs*

Decryption: Ciphertext "ewbs"

Step 1: Block substitution -

ew → *a!*

bs → *a~*

Step 2: Omitting padding and filler character –

Ignoring filler and padding characters, retrieved plaintext is "aa"

The screenshot in figure 3 gives an example of another plaintext encryption, which is a software implementation of the explained algorithm of modified playfair cipher.

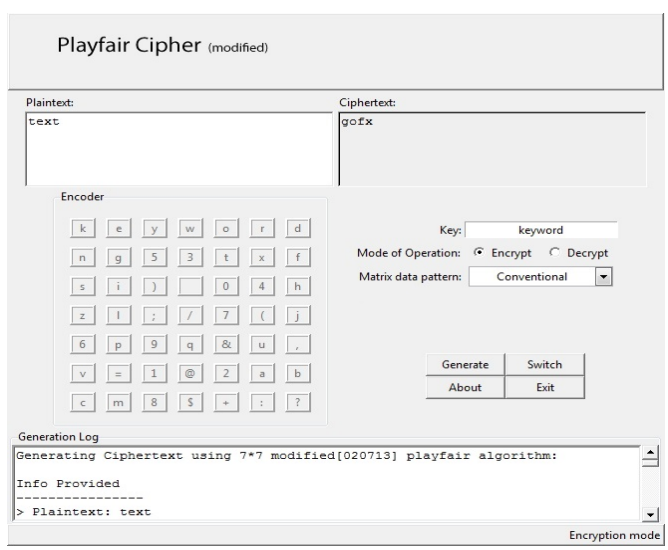

Figure 3: A software implementation of modified playfair cipher algorithm [10].

3.2 Matrix Permutation Patterns

Matrix permutation patterns define how data is to be arranged in matrix. For example, the traditional playfair used a left to right and top to bottom order which is re

ferred in this paper as conventional pattern. Unlike a single pattern, this model uses multiple permutation patterns to choose from. Some of the permutation patterns:

Spiral Pattern

This pattern takes any of the four edges as starting point and consumes the matrix at a spiral concentric fashion. Or, starts from the center and expands through the matrix at a spiral expanding fashion. A total possible variation is 16. A clockwise spiral pattern using upper-left edge as starting point is given in table 6.

TABLE 6
A SPIRAL PATTERN CONFIGURATION USING 7 × 7 MATRIX

1	2	3	4	5	6	7
24	25	26	27	28	29	8
23	40	41	42	43	30	9
22	39	48	49	44	31	10
21	38	47	46	45	32	11
20	37	36	35	34	33	12
19	18	17	16	15	14	13

Diagonal Pattern

As the name suggests, diagonal pattern follows a diagonal route to consume the matrix. A total possible variation is 8. A diagonal pattern using upper-left edge as starting point is shown in table 7.

TABLE 7
A DIAGONAL PATTERN CONFIGURATION USING 7 × 7 MATRIX

1	3	6	10	15	21	28
2	5	9	14	20	27	34
4	8	13	19	26	33	39
7	12	18	25	32	38	43
11	17	24	31	37	42	46
16	23	30	36	41	45	48
22	29	35	40	44	47	49

J-Pattern

J pattern uses a matrix consumption path that is composed of multiple J shaped route. A total possible variation is 8. A J-pattern using horizontal configuration with upper-left edge is shown in table 8.

TABLE 8
A J-PATTERN CONFIGURATION USING 7 × 7 MATRIX

1	2	3	4	5	6	7
14	13	12	11	10	9	8
15	16	17	18	19	20	21
28	27	26	25	24	23	22
29	30	31	32	33	34	35
42	41	40	39	38	37	36
43	44	45	46	47	48	49

It is also possible to generate user defined patterns. The sole purpose of multiple patterns is to scramble/permutate the matrix. Patterns can be changed with every data exchange session, which generates a random behavior that makes it difficult for attacker to decide what pattern is used. At the same time, number of possible structure rises dramatically. For example, if there are m patterns and n possible structures for each pattern, then, the total structures will be m × n. This makes cryptanalysis more difficult.

4 Analysis of Proposed Algorithm

Playfair was considered safe at the beginning of 20th century, because of the effort it takes to break the cipher manually. But, after invention of computers, this became a trivial problem [7]. The first known solution to this digram cipher is given by J. Mauborgne in 1913 [11]. After this, different methods are discovered to effectively crack this substitution cipher [7], [8], [12]. There are several common attacks on ciphers, which are – ciphertext only attack, known plaintext attack and chosen plaintext attack [13]. The proposed algorithm tends to increase the security by character set extension, generation of random key and a further permutation in the arrangement pattern of matrix. This creates confusion for attacker that makes the algorithm stronger. One way to exploit the security of algorithm like this, attacker needs to know the nature of the language. This is because the frequency of a letter in a language is always the same. And, this may lead an attacker to expose the plaintext structure. So, this possibility must be eliminated / minimized. Hence, a pre-encryption and post-encryption frequency analysis is required to show the effectiveness of an algorithm. To generate frequency distribution graph, number of occurrences of each letter in character set are counted and divided by occurrence of e (the letter in English with highest frequency). As a result, a relative frequency in range 0 and 1 is gained. The points on the horizontal axis correspond to the letters in order of decreasing frequency. More flat the relative frequencies are, more concealed the information is [14].

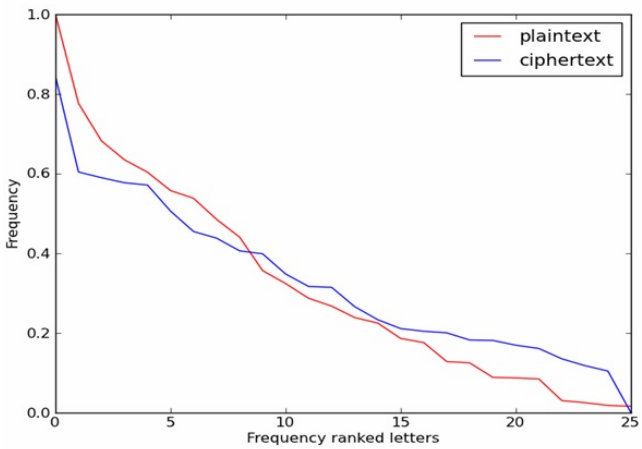

Figure 4: Frequency distribution in plaintext vs. conventional playfair ciphertext.

A frequency distribution analysis is performed on 55,900 popular words in English consists of 419,968 letters. Figure 4 shows the change in frequency distribution between a plaintext and conventional playfair ciphertext. The ciphertext curve is slightly flatter than plaintext, which denotes that some frequency information has been concealed.

On the other hand, figure 5 shows a relative comparison between plaintext, conventional playfair and modified playfair ciphertext. Modified playfair cipher curve shows some significant improvement over conventional playfair. Because, it provides a more flat curve then that of conventional playfair, which is better security. But yet, like the conventional playfair, it can be broken by following the identical principles, except, the modified one requires harder effort

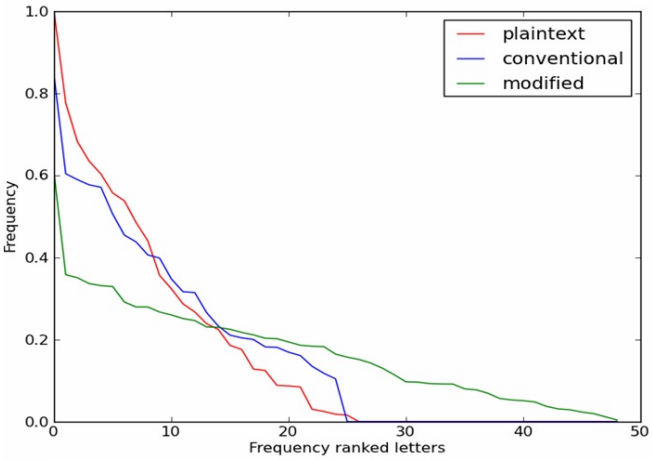

Figure 5: Relative frequency distribution between plaintext, conventional playfair ciphertext and modified playfair ciphertext.

5 Conclusion

This paper attempts to modify and extend the existing 5 × 5 playfair cipher in different ways, by extended character set, I and J ambiguity reduction, matrix modification and one to one ciphertext generation. The original playfair uses a single pattern to generate matrix in a left to right and top to bottom order. But instead, in proposed model, multiple matrix generation patterns are introduced. Selection of these patterns is driven by user which acts as initialization vector. This randomized behavior generates confusion for attacker that increases the security. At the same time, matrix extension to 7 × 7 produces more possible structures than original playfair. This paper can be used as a learning resource that will help to understand playfair, its vulnerabilities and will show an effective way to improve it, thus, helping students in understanding cryptography, algorithm enhancement and cryptanalysis in an easier way, which would be otherwise difficult with more advanced ciphers like DES or AES. It is possible to encrypt any binary data by using modified playfair cipher along with base 32 encoding. Wholly, the algorithm is unique, unambiguous and simple that leaves a lot of possibilities to be a useful learning resource and possibilities to implement it as a low-security protocol in a wide range of devices, including low powered embedded ones.

References

[1] A. Menezes, , A. J. Menezes, P. van Oorschot, S. Vanstone, *Handbook of Applied Cryptography*, CRC Press, 1996, pp. 4.

[2] William Stallings, *Cryptography and Network Security,* Fifth Edition, Pearson Education, 2011, pp. 33

[3] William Stallings and Lawrie Brown, *Computer Security - Principles And Practice*, Second Edition, Pearson Education, 2011, pp. 39-62.

[4] Simon Singh, *The Code Book – The Science of Secrecy from Ancient Egypt to Quantum Cryptography*, Anchor Books, 1999.

[5] William Stallings, *Cryptography and Network Security - Principles And Practice,* Fourth Edition, Prentice Hall, 2005, pp. 40.

[6] A. Menezes, , A. J. Menezes, P. van Oorschot, S. Vanstone, *Handbook of Applied Cryptography*, CRC Press, 1996, pp. 274.

[7] Keith M. Martin, *Everyday Cryptography – Fundamental Principles & Applications*, Oxford University Press, 2012, pp. 62.

[8] Michael J. Cowan (2008): *Breaking Short Playfair Ciphers with the Simulated Annealing Algorithm*, "*Cryptologia*", 32:1, pp. 71-83.

[9] Aftab Alam, Sehat Ullah, Ishtiaq Wahid & Shah Khalid, *Universal Playfair Cipher Using MXN Matrix, "International Journal of Advanced Computer Science"*, Vol. 1, No. 3, pp. 113-117, Sep. 2011.

[10] A. T. Shakil, *A demonstration project on conventional and modified Playfair cipher algorithms*. Available online: http://sourceforge.net/projects/cryptographytools/files/Playfair%20Cipher/

[11] Joseph O. Mauborgne, *An advanced problem in cryptography and its solution*, Army Service Schools Press, 1918.

[12] Dorothy L. Sayers, *Have His Carcase,* Victor Gollancz, 1932.

[13] Mark Stamp, Richard M. Low, *Applied Cryptanalysis - Breaking Ciphers in the Real World*, Wiley Publication, pp. 2.

[14] William Stallings, *Cryptography and Network Security - Principles And Practice,* Fifth Edition, Pearson Education, pp. 45.

Design and Implementation of Microcontroller Based Digital Soil pH Meter

M.A. A. Mashud, M. H. Uddin and Md. Serajul Islam

Dept. of Applied Physics, Electronics & Communication Engineering
Islamic University, Kushtia-7003, Bangladesh.
Email: ms.mashud@yahoo.com

Dept. of Applied Chemistry & Chemical Technology
Islamic University, Kushtia-7003, Bangladesh.

Dept. of Medical Physics & Biomedical Engineering Engineering
Gono Bishwabidyalay, Savar, Dhaka, Bangladesh.

Abstract— A state-of-the-art-technology was used to design a digital soil pH meter. This paper focuses on the measurement of the value of pH (soil). The very simple circuitry was employed in this design. To do this, a low cost microcontroller PIC16F876 was used to control the function of the system. A system software was developed using C programming language. A common anode display was used to display the output ranges from 00.00 to 99.99 by the four seven-segment display.

Keywords— Microcontroller, soil pH, digital, PCWH and low-cost
© University of Liberal Arts Bangladesh
All rights reserved.

Manuscript received on 5 July 2014 and accepted for publication on 18 August 2014.

1 Introduction

SOIL pH is the single most important chemical property of the soil like soil texture is to the physical properties. Soil pH influences most chemical and biological processes occurring in soil and some physical processes. These include supply and availability of essential elements, growth of soil organisms of all kinds, nitrification of ammonia and rock weathering. The pH of soil is an important factor in determining which plants will grow because it controls which nutrients are available for the plants to use. Knowing the pH of the soil will quickly allow user to determine if the soil is suitable for plant growth and what nutrients will be most limiting.

Soils influenced the composition of forest stand and ground cover, rate of tree growth, vigour of natural reproduction and other silviculturally important factors [1]. Physico-chemical characteristics of forest soils vary in space and time because variation in topography, climate, weathering processes, vegetation cover, microbial activities [2] and several other biotic and abiotic factors. Vegetation also plays an important role in soil formation [3]. The yearly contribution of surface vegetation to soil, in the form of needles, leaves, cones, pollen, branches and twigs, gradually decomposes and becomes a part of the soil [4]. The nutrient thus, returned in the soil, exerts a strong feedback on the ecosystem processes [5]. Plant tissues (above and below ground litter) are the main source of soil organic matter, which influences the physico-chemical characteristics of soil such as, texture, water holding capacity, pH and nutrients availability [6]. Nutrients supply varies widely among ecosystems [7], resulting in differences in plant community structure and its production [8].

The nature of soil profile, pH and nutrient cycling between the soils and crops are the important dimensions to determine the site quality. The vegetation influences the physico-chemical properties of the soil to a great extent. It improves the soil structure, infiltration rate and WHC, hydraulic conductivity and aeration [9,10].

Soil pH is a measure of the relative acidity or basicity of a given soil. The pH scale (0-14) is a logarithmic expression of hydrogen ion activity. A pH of 7.0 is neutral, and soils above or below this value are either alkaline or acidic, respectively. A soil with a pH of 6.0 is ten times more acidic than a soil of pH 7.0. Changes in soil pH dramatically affect the availability of nutrients to growing crops. The pH meter is the preferred method for determination of soil pH.

In year 2011, the author M.A.A. Mashud et. al, [11] explained a digital pH meter using microcontroller to measure the pH of blood. This design system is simple and clinically applicable. The developed system is tested among 15 patients and found sound result. In this work

microcontroller PIC12F675 is used with watch-dog mode to avoiding the external oscillator circuit and MC14511B

is used as a buffer and driver circuit.

Now, the author developed a digital pH meter to measure the pH of soil using a fast response microcontroller PIC16F876. In this work for better performance external oscillator circuit is used. For quickly real time display MC14511B is avoided and common cathode display is used.

2 Design Consideration

The system is divided into six parts: the low voltage power supply, sensor circuit, buffer amplifier, summing amplifier, microcontroller unit and display circuit. Low voltage power supply produces 5 volts for the buffer amplifier circuit, summing amplifier and microcontroller. A LM336 is used to produce 2.5V. The signal from pH electrode goes to the buffer amplifier circuit. The amplified signal is the input of the summing amplifier, which goes to the microcontroller. The output of the microcontroller operates the display circuit. The block diagram and the complete circuit diagram of the developed system are shown in Figure 1 and Figure 2 respectively.

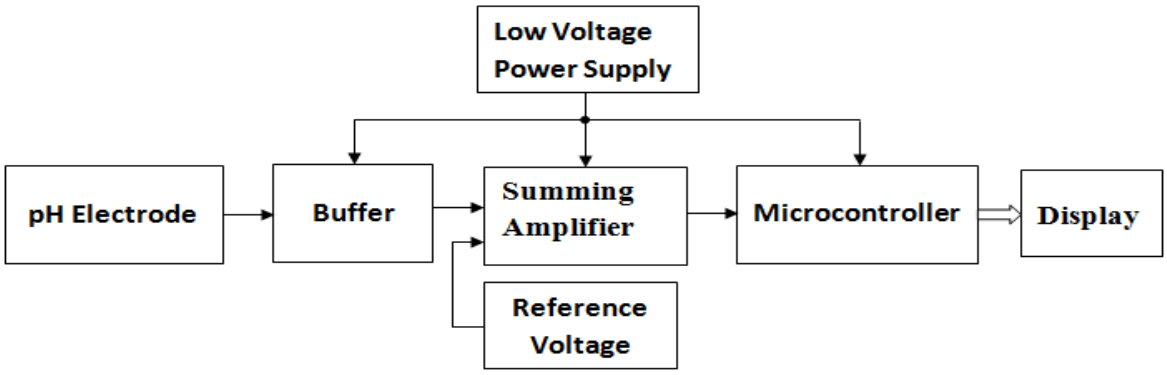

Figure 1: Block diagram of the designed system

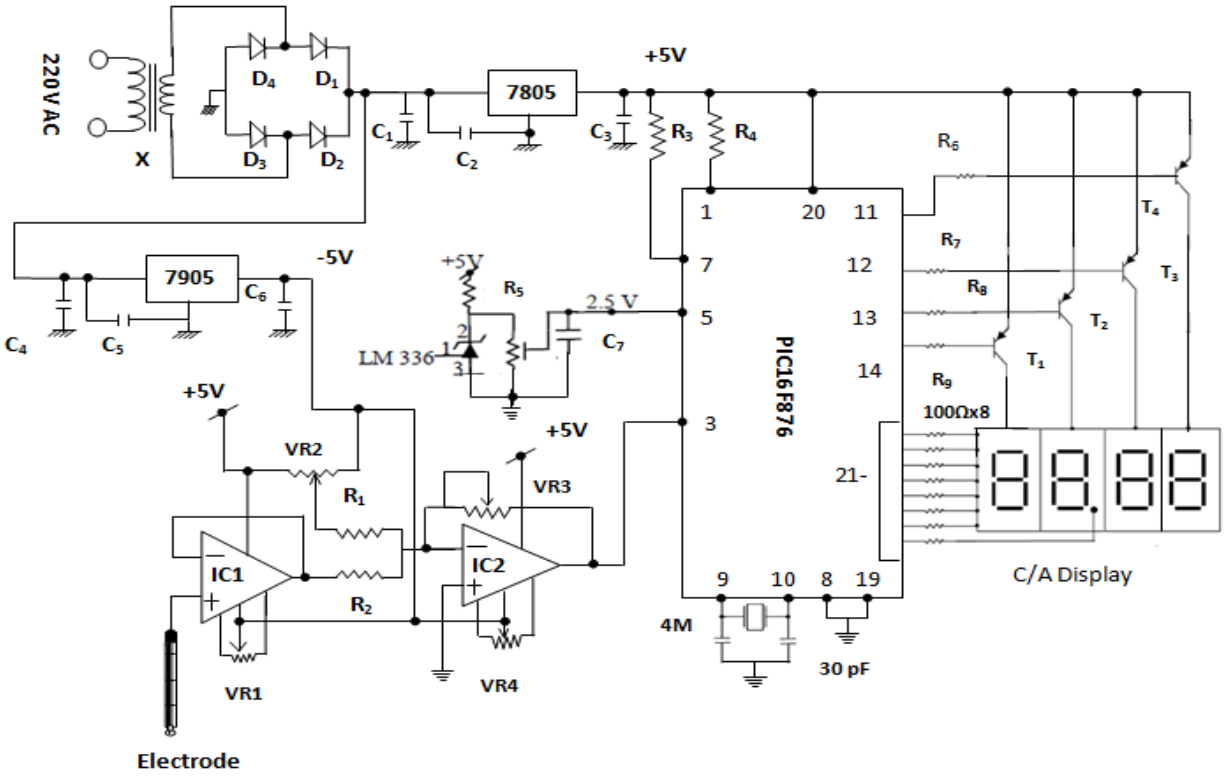

Figure 2: Complete circuit diagram of the designed system

2.1 Low Voltage Power Supply

The microcontroller and al electronic components are used in designing the complete pH meter require a dc voltage (+5v & -5v). A highly stable regulated dc power supply was designed for this purpose. The complete circuit of a regulated dc power supply is shown in Figure 2, using IC7805 and IC7905 as a voltage-regulating device [12]. It contains four diodes, D_1, D_2, D_3 and D_4, which are connected to the a.c. supply [13] for +5V.

2.2 Buffer Amplifier

The buffer amplifier [14] circuit consists of IC1 and VR1. The signal from the pH electrode is connected to non-inverting terminal of IC1. VR1 is connected between pin 1and 5 for a null setting.

2.3 Summing Amplifier

The summing amplifier [15] consists of IC2, VR2, VR3, VR4, R_1 and R_2. The output of the summing amplifier is used as a microcontroller's input. This system uses two input summing amplifiers with inverting configuration

2.4 Microcontroller Unit

This powerful (200 nanosecond instruction execution) and easy-to-program (only 35 single word instructions) CMOS FLASH-based 8-bit microcontroller packs Microchip's powerful Programmable Interface Controller (PIC) architecture into a 28-pin package and is compatible with the PIC16C5X, PIC12CXXX and PIC16C7X devices [16,17]. The PIC's Console Command Processor (CCP) which is capture/compare/pulse-width module can also detect rising or falling edges every four or 16 pulses [18]. PIC16F876 features 256 bytes of electrically erasable programmable read-only memory (EEPROM) data memory, self programming, 5 channels of 10-bit Analog-to-Digital (A/D) converter, 2 additional timers, 2 capture/compare/PWM functions, the synchronous serial port can be configured as either 3-wire Serial Peripheral Interface (SPI) or the 2-wire Inter-Integrated Circuit (IIC) bus and a Universal Asynchronous Receiver Transmitter (USART). All of these features make it ideal for an advanced level A/D applications in automotive, industrial appliances and consumer applications. Pin diagrams of microcontroller PIC16F876 are shown in Figure 3.

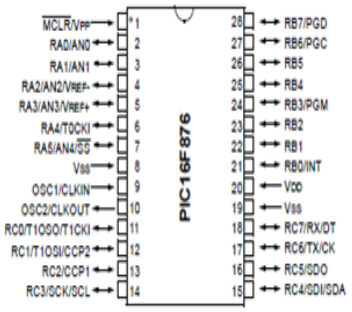

Figure 3: Pin diagram of microcontroller PIC16F876

3 Systeem Program

The software has been developed for controlling the whole system. The software is divided into different sub routines and main routines. The compiler PCWH is used to develop the software [19]. The flow chart of the program is depicted in Figure 4.

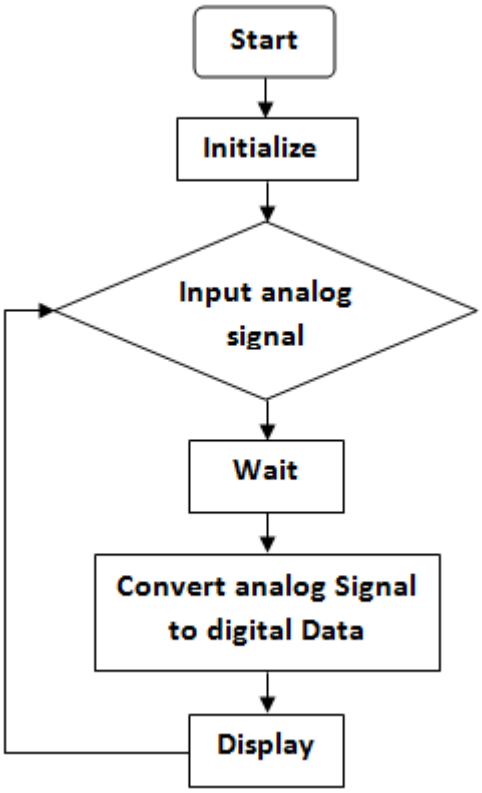

Figure 4: Flow chart of the developed system program

4 Results And Discussion

The microcontroller based digital soil pH meter was successfully designed and developed, as its performance was strong. The result of pH is compared with the actual result. The model of the laboratory pH meter is PHM83, with an accuracy of +/-0.1%. Figure 5 provides a graphic representation of the comparison between the designed system and the laboratory pH meter. The graph illustrates that the developed system has sound stability and accuracy. Our designed pH meter was tested and compared with standard pH value. The result is shown in table 1. The results showed that the designed system can be used for measuring pH [20, 21].

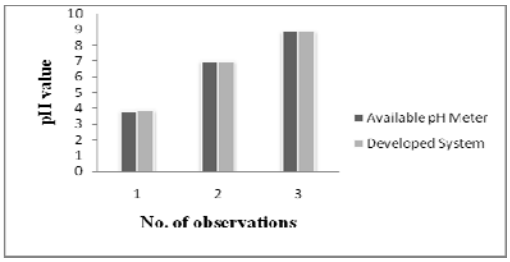

Figure 5: Comparative study of developed system and available pH meter

TABLE 1
COMPARISON OF DIFERENT VALUES WITH STANDARD VALUE

Standard (pH)	1	3	5	7	9	11
The first measurement(pH)	1.01	2.98	5.06	7.01	9.03	11.05
The second measurement(pH)	1.03	2.92	5.09	7.05	9.08	11.08
The third measurement(pH)	1.02	2.95	5.06	7.04	9.10	11.04
The fourth measurement(pH)	1.04	3.02	5.07	7.03	9.07	11.03
The fifth measurement(pH)	1.02	2.96	5.04	7.04	9.09	11.02
Average(pH)	1.02	2.97	5.06	7.03	9.07	11.04
Average error quantity (pH)		0.05				

Clay soil has a lower pH than pasture soil because clay soil is found in lower plains, it is exposed to excessive amounts of water and nutrients. Therefore, lowering the pH as seen in the results. A lot of water moving through soils requires fertilization for good crops and tends to be more acidic (pH < 7). At lower pH's there is more aluminums in the soils which can be toxic to plant and animal growth. Most soils target pH is 6.5. Nutrients are easily provided for plant growth and development at this pH. A pH of 6.5 also promotes growth of beneficial micro-organisms within the soil itself. Therefore the soil pH meter is essential for measuring the value of pH. We seems that our designed pH meted be beneficial for the developing countries because of low cost.

4 CONCLUSION

The price of electronic equipments has fallen significantly in recent times, though the cost of equipment in Bangladesh remains expensive. However due to the rapid development of micro electronics, all the designed component and instruments are available at a lower price. The device is reliable in operation and it costs approximately U$100 for fabrication, whereas the price of a similar instrument in the international market is no less than U$500. Moreover, the comparison of the features of the presently used system shows that the developed system is a better choice in terms of cost, portability and design. Therefore, the opportunity to use the designed instruments will be open to many users, particularly in developing countries.

REFERENCES

[1] Bhatnagar HP. Soils from different quality sal (*Shorea robusta*) forests of Uttar Pradesh.Tropical Ecology 1965; 6: 56-62

[2] Paudel S. Sah JP. Physiochemical characteristics of soil in tropical sal (*Shorea robusta* Gaertn.) forests in eastern Nepal. Himalayan Journal of Sciences 2003; 1(2)107-110

[3] Champan JL, Reiss MJ. *Ecology Principles and Application*. Ca bridge; Cambridge University Press 1992; 294 p.

[4] Singh RD, Bhatnagar VK. Differences in soil and leaf litter nu trient status under *Pinus, Cedrus and Quercus*. Indian Journal of Forestry. 1997; 147-149p

[5] Pastor J, Aber JD, Mc Clangherty CA, Melillo JM. Above ground production and N and P cycling along a nitrogen mineralization gradient on black hank island,Wisconsin Ecology 1984; 65:256-268

[6] Johnston AE. Soil organic matter; effects on soil and crops. Soil Use Management 1986; 2: 97-105.

[7] Binkley D, Vitousek PM. *Soil Nutrient Availability*. In: Pearey, R.W., J. Ehleringer, N.A., Mooney and Rundel, P.W. (eds) Plant Physiological, Field Methods and Instrumentation London; Champan and Hall. 1989; 75-96.

[8] Ruess JO, Innis GS. A grassland nitrogen flow simulation mode. *Ecology* 1977; 58: 348-429.

[9] Ilorker VM, Totey NG. Floristic diversity and soil studies in Navegaon National Park (Maharashtra). Indian Journal of Fore stry 2001; 24(4): 442-447.

[10] Kumar Munesh, Bhatt VP, Rajwar GS. Plant and soil diversities in a sub-tropical forest of the Garhwal Himalaya. Ghana Journal of Forestry 2006; 19-20:1-19pp

[11] M. A. A. Mashud, M. A. Masud, Md. Serajul Islam. ULAB Jounal of Science and Engineering, 2011, vol.4 pp31-34

[12] "Farnell Semiconductor Data CD-ROM," Data sheet 2143.pdf, 7805IC, 7905IC, Issue 7 January 2000.

[13] V.K. MEHTA, "Principles of Electronics," Revised edition, page-150.

[14] R.F. Coughlin and F. F. Driscoll "Operational Amplifiers and Linear Integrated Circuits," Second Edition

[15] R. A. Gayakward, "Op-Amps and Linear Integrated Circuits," Fourth Edition,

[16] M. A. Mazidi, R.M. Kinlay & D. Causey, 2008 "PIC Microcon troller", Prentice Hall Inc.

[17] J. B. Peatman, 1997, "Design with PIC microcontroller", Pren tice Hall Inc.

[18] "Microchip Data sheet" PIC16F876.shtml accessed on 5.8.2010.

[19] PCWH Compiler, version 3.43.

[20] Narain Arora, "Mosfet Modeling for VLSI Simulation", World Scientific Publishing Co. Pte. Ltd., 2007.

[21] A.B.Bhattacharyya, "Compact Mosfet Models for VLSI Design", John Wiley & Sons (Asia) Pte Ltd, 2009.

Md. Abdullah-Al-Mashud was born on Nov.15, 1980 in kushtia, Bangladesh. He received the B.Sc (Hons) degree and M.Sc degree in Applied Physics, Electronics and Communication Engineering (APECE) from Islamic University, Kushtia, Bangladesh in 2003 and 2004 respectively. He works as a faculty member in the department of APECE, Islamic University, Bangladesh. His current interest is microprocessor / microcontroller applications in control, automation, medical instruments, environmental monitoring, low cost electronic systems, Medical Image Processing. His work has produced 13 peer-reviewed scientific International and National Journal papers and also 6 National and International Conf- rences papers.
.

Helal Uddin was born on July.03, 1978 in Jhenidah, Bangladesh. He received the PhD degree fron the Dept. of Applied Physics and Chemistry, Graduate School of Electro-Communications, University of Electro-Communications, 1-5-1 Chofugaoka, Chofu, Tokyo, Japan in 2009. He works as a faculty member in the department of ACCT, Islamic University, Bangladesh. His work has produced 15 peer-reviewed scientific International and National Journal papers. He has published 09 papers in National and International Conf- rences.

Md. Serajul Islam was born in Panchagar, Bangladesh. He received the M.Sc degree in Physics from Rajshahi University, Bangladesh. He was a Chief Scientific Officer and Director in the Institute of Electronics, AERE, Atomic Energy Commission, Savar, Bangladesh. Now he is a professor in the Department of Medical Physics and Biomedical Engineering, Gono Bishwabidyalay. Saver, Bangladesh. His work is design, development and analysis of electronic instruments and reactor control. His work has produced nearly 55 peerreviewed scientific papers and 02 patents.